IMPLEMENTED 01/2016

SECTION 1

Part 2

Requirements for Load Support
AND
Load Securement Items

Contents of Part 2

Rule		Page
Rule 10.	Wood Types and Species	23
Rule 11.	Wood and Wood Substitute Securement Items	23
Rule 12.	Inflatable Dunnage Bags and Pack-out Materials	28
Rule 13.	Lateral Load Protection	32
Rule 14.	Attachment of Securement	36
Rule 15.	Nails, Staples, and Lag Screws	38
Rule 16.	Bolts, Rods, Bar, and Plate	39
Rule 17.	Steel Banding	41
Rule 18.	Protectors for Bands and/or Wire	55
Rule 19.	Nonmetallic Strapping	55
Rule 20.	Synthetic Webbing and Assemblies	62
Rule 21.	Chain, Binders, and Assemblies	72
Rule 22.	Wire Rope/Cable	80
Rule 23.	Turnbuckles, Clevises, and Shackles	82
Rule 24.	Wire—High Tension and Common	83
Rule 25.	Substitution of Securement Items	84
Rule 26.	Left vacant intentionally	85
Rule 27.	Left vacant intentionally	85

IMPLEMENTED 01/2016

IMPLEMENTED 01/2016

10. WOOD TYPES AND SPECIES

10.1 Appendix D, "Material Mechanical Properties," provides a table listing the species of wood acceptable for all uses where "hardwood," "lumber," or "wood" is specified in the various Figures contained in Sections 2 through 7 and for loads prepared in accordance with the General Rules, Section No. 1. The species in the table are not all inclusive. Species are selected whose specific gravity of the wood at 12% moisture content is 0.50 lb/ft^3 and whose compression perpendicular to the grain of the wood is at least 870 psi. (These values are based on clear wood that are free of knots, cross-grain checks, and splits.) The species identified in the table as "hardwoods" meet these criteria. If a particular species is not specifically identified, it cannot be used as "hardwood" unless it meets the above mechanical properties. Species that do not meet the above criteria are not "hardwood" for these figures and rules, but do qualify as "lumber" where "lumber" dunnage is required.

Note 1: Plywood may be used as a filler or "softener" to even out rough surfaces on a car deck.

Note 2: When green saplings meeting the requirements of Rule 13.11.1 in are used for side stakes under allowable figures in Section 5, Douglas fir (coast type only) also is acceptable.

Note 3: Douglas fir (coast type) is acceptable for use as bearing pieces and separators under specific figures where hardwood is specified for loads weighing up to 140,000 lb. Separators must be minimum full 3 × 4 rough cut.

10.2 For lumber loads covered only by figures in Section 5 or by these General Rules, items of securement made from wood, with the exception of stakes, may be of the same species as the lumber in the load. Stakes must be in accordance with Rule 10.1.

10.3 All woods must be of good quality, straight grained, and free of decay and strength-impairing knots.

10.4 Except when stakes are concerned, the dimensions specified in specific Figures or General Rules for wood securement items are permissible as rough or finished commercial dressed sizes. For example, a dressed 2 × 4 piece of lumber may nominally measure 1 1/2 in. × 3 1/2 in., which is acceptable unless otherwise stated. Dimensions of stakes must be to the minimum sizes in the specific figures or General Rules, whether rough or finished.

11. WOOD AND WOOD SUBSTITUTE SECUREMENT ITEMS

BEARING PIECES, SEPARATORS, OVERHANGING SUPPORT, CLAMPING PIECES, BRACES, CLEATS, WEDGES, BLOCKS, GUIDE RAILS, VERTICAL STABILIZERS, PROTECTIVE MATERIAL, AND ATTACHED DUNNAGE

11.1 General Requirements for Wood and Wood Substitute Securement Items

11.1.1 Such items of lumber must be in accordance with General Rule 10. Substitute, if desired, suitable metal sections of equal strength. When metal items are specified, substitutions cannot be made. Also, "composite lumber" may be substituted for wood when used as dunnage (except side stakes or binders), provided it is equal to or greater than the mechanical properties of hardwood relative to compression, friction, nail pull, and lateral yield. For bearing pieces, overhanging support, separators, and cleats, the width of the pieces must not be less than the height, unless otherwise provided for under a specific figure.

11.1.2 All General Rules loads require the use of hardwood or composite lumber with equal or greater mechanical properties of hardwood for all dunnage. Other lumber types are allowable with permission of all carriers in the route.

11.2 Bearing Pieces and Separators

11.2.1 Bearing pieces, separators, and vertical stabilizers must be of uniform thickness and width for their entire length, unless otherwise provided for under a specific figure. All bearing pieces are to be untreated.

11.2.2 The width of the base must not be less than its height. The length must not be less than the width of the car as measured between the inside face of the stake pockets.

11.2.3 For General Rule loads, bearing pieces must be secured to the car floor. Except as provided in Rule 11.3.1, if the load is prepared to a specific figure that does not require securement, securement of bearing pieces is not required, although it is recommended when practicable.

11.2.4 When rods, bolts, etc., are used to secure bearing pieces or other dunnage to the floor, the requirements of General Rule 16 must be followed unless directed otherwise in the specific figure. Fig. 11.1 shows an example of securing a bearing piece through a stake pocket.

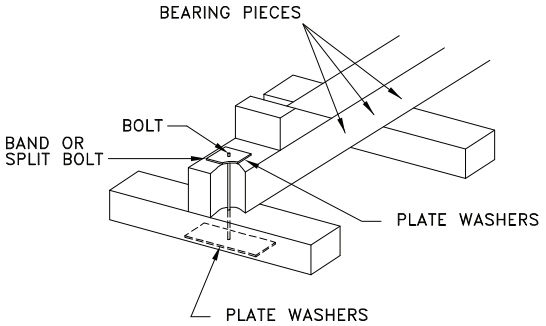

Fig. 11.1 Method of securing bearing pieces to stake pockets

11.2.5 Bearing pieces under loads requiring the use of more than one car must be secured so as to prevent displacement. For loads requiring the use of more than one car and pivoted bolsters, see Rule 30.10.

11.3 Increasing Height of Bearing Pieces, Separators, and Vertical Stabilizers

11.3.1 Bearing pieces 5 in. high or less must be in one piece. Bearing pieces over 5 in. high may be laminated to increase height, providing no laminations are less than 2 in. thick and all pieces are the full width and length of the bearing piece and are adequately secured together.

11.3.2 When the bearing piece is 6 in. × 8 in. or larger and additional bearing piece height is required, longitudinal risers of 2 in. × 6 in. minimum size and projecting 18 in. beyond each side of the bearing piece may be added, providing the height of risers does not exceed the width of its base.

11.3.3 Risers must be located at points of load concentration, using five risers for bearing pieces less than 12 in. × 12 in. and three risers for bearing pieces over 12 in. × 12 in.

11.3.4 Risers must be secured to the car floor, underneath of and at right angles to the bearing pieces. (The foregoing provisions for lamination and buildup of bearing pieces do not apply to forest products loading, Section 5.)

11.4 Supplemental bearing support may be required in order to adequately support a commodity that will extend beyond the side of the car deck when loaded, such as with some wheeled vehicles, farm machinery, etc. When a commodity is equipped with pneumatic tires that are supporting the weight of the vehicle, a supplemental support must be applied anytime 25% or more of the tire's tread width will extend beyond the solid support of the car deck. The solid support of the deck does not include any car fixtures such as chain ratchet channels, voids in the deck (such as pedestal storage openings), or tie-down appurtenances along the outside edge of the car deck. The tread width is defined as that portion of the tire that normally contacts the road surface with the vehicle stopped and the tire properly inflated.

11.4.1 When necessary to extend the car deck width to provide bearing for wheels, apply one-piece hardwood blocking on top of stake pockets, long enough to span at least two stake pockets and support wheel-chock blocks when applied. The blocking height must be level with the top of the car deck. Secure in place with lumber strips, 1 in. × 4 in. × 18 in. at each end of the blocking. Nail each strip to the car deck with three 20d nails and to blocking with two 20d nails. Refer to Fig. 11.2 for illustration.

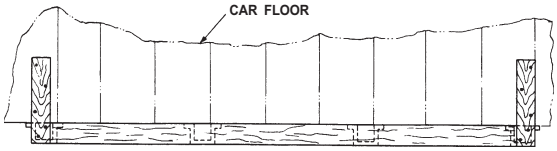

Fig. 11.2 Floor extension method

11.4.2 As an alternative to deck extensions for wheeled vehicles, utilize a hardwood support blocking secured to the car deck under the vehicle axle or frame structure to effectively transfer the weight of the vehicle from the tires. The height of the blocking must be sufficient to relieve the vehicle weight from the tire. The height of such blocking may be built up with solid pieces nailed one to another during construction. The wood grain in each layer must be aligned perpendicular to the grain in the layer below. The overall height must not exceed its width at the base. Each overhanging tire must be independently supported and the opposing-side blocking structures are to be as far apart as practicable in order to achieve maximum lateral stability of the vehicle.

IMPLEMENTED 01/2016

11.5 When protective material is located between the load and bearing pieces and/or separators, it must not reduce the coefficient of friction.

11.6 Laminated Bearing Pieces, Separators, and Vertical Stabilizers

11.6.1 Except as permitted herein and when otherwise specified, separators 5 in. high or less must be of one piece. Separators over 5 in. high may be built up of lumber of applicable species and/or suitable strength.

11.6.2 Bearing pieces, separators, and vertical stabilizers, where specified in *Forest Products Loading*, Section 5, must not be built up or laminated unless the method of lamination has been approved by the AAR.

11.6.3 All approved laminated pieces must be stamped on both ends with the letters AAR and the fabricator's identifying mark. Table 11.1 lists the approved fabricators and their identification markings.

Table 11.1 Approved laminated dunnage manufacturers

Name of Fabricator	Identification Mark
Boise Cascade	AAR-BC
Georgia Pacific Corp.	AAR-GP
Louisiana-Pacific Corporation	AAR-LPC
Pacific Woodtech Corp.	AAR-PWC
Strickler-Taylor Lumber Co.	AAR-STL
Trus Joist	AAR-TJ
Willamette Industries, Inc.	AAR-WII

11.6.4 Coated laminated material must not be used for bearing pieces, separators, vertical stabilizers, or guide rails.

11.6.5 Reuse of laminated material is prohibited.

11.7 Idler Car Overhang Support

A bearing piece (wood, steel plate, and grease) can be modified as shown in Fig. 11.3 to accommodate flexible material and provide support on the idler car, allowing slippage for curvature in transit.

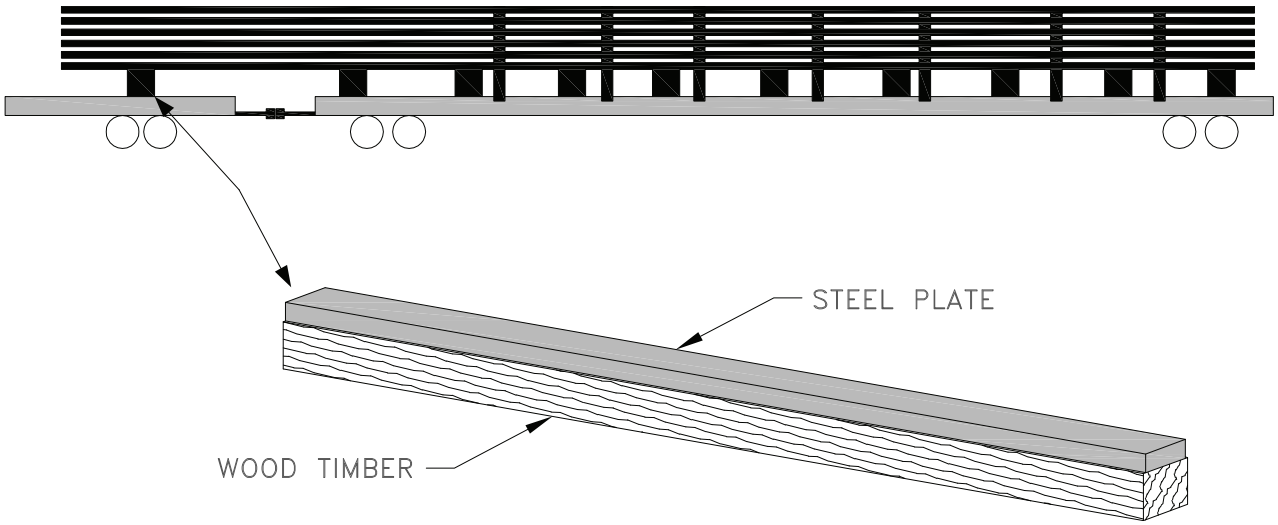

Fig. 11.3 Idler car overhang support

11.7.1 To provide and maintain specified clearance above the car floor for a flexible material load, overhanging support may be located not more than 18 in. from center of bolsters toward the end of the car.

11.7.2 The length of a sliding piece must be equal to the width of the car. The width of the base may not be less than its height. It is recommended that overhanging support be placed directly over the truck bolsters. If this is not practical, the sliding piece(s) may be placed between bolsters, provided the weight distribution remains in compliance with General Rule 3

11.7.3 When the sliding piece is 6 in. × 8 in. or larger and additional height is required, longitudinal risers may be applied under the sliding piece.

11.7.4 When used, risers must be a minimum of 2 in. × 6 in. and long enough to project at least 18 in. beyond each side of the sliding piece. The height of risers may not exceed their width.

IMPLEMENTED 01/2016

11.7.5 When used, risers must be located at points of load concentration using a minimum of five risers for each sliding piece less than 12 in. × 12 in. A minimum of three risers must be applied for overhanging support over 12 in. × 12 in.

11.7.6 Risers must be secured to the car floor, underneath of and at right angles to the overhanging support. Risers are to be toe-nailed to the car floor with 20-D nails spaced about 12 in. apart on both sides.

11.7.7 Steel plate, 1/4 in. × 6 in., length equal to width of the sliding piece, must be applied to the sliding piece. Using 3/4-in. flathead countersunk bolts, the plate is to be secured through the sliding piece, the risers, and the car floor. The bolts must be countersunk to clear the top of the steel sliding plate.

11.7.8 The top surface of overhanging support must be lubricated with axle grease or a comparable lubricant to provide unrestricted movement of the load overhang. End of lading must extend a minimum of 40 in. past sliding piece.

11.8 Load-Clamping Pieces

11.8.1 Load-clamping pieces must be hardwood unless otherwise specified in a figure.

11.8.2 To prevent the clamp from splitting, a 1/2-in.-diameter bolt shall be applied crosswise through the end grain on each end of the hardwood clamp. The bolts are to be located between the vertical clamping rod and the end of the clamping piece, but no closer than 1 1/2 in. to the end of the clamping piece. After securing bolts with appropriate nuts and washers, the bolt threads must be chisel-checked to prevent the nut from backing off.

11.8.3 As an alternative to the bolts, one 1 1/4 in. × .029 in. high tension band is to be applied to each end of the clamping piece.

11.9 Blocking and Bracing

11.9.1 When wedges are used for end blocking against vertical surfaces, the flat side adjoining the right angle of the wedge should be placed on the floor as shown in Fig. 11.4 to achieve maximum contact with the load.

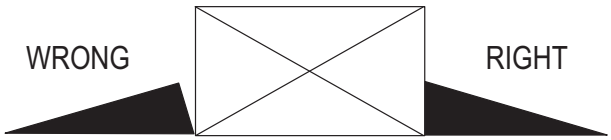

Fig. 11.4 Correct Wedge Application

11.9.2 Unless otherwise specified, the length of nails used in the assembly of blocking consisting of two or more pieces must be at least 1 in. longer than the thickness of the block member being secured.

11.9.3 Unless otherwise specified, for every 16 in. of blocking length, secure with at least one nail for each 2 in. of block width, or any fraction thereof, plus one additional nail. (Example: a 2 × 4 block 15 in. long is 4 in. wide and requires two nails plus one, for a total of three nails. The same block 30 in. long would require a minimum of six nails.) Table 11.2 lists the number of nails by board length and width.

Table 11.2 Minimum number of nails required to secure blocking

	Board Width (in.)				
Board Length (in.)	**4**	**6**	**8**	**10**	**12**
1 to 16	3	4	5	6	7
17 to 32	6	8	10	12	14
33 to 48	9	12	15	18	21
49 to 64	12	16	20	24	28
65 to 80	15	20	25	30	35
81 to 96	18	24	30	36	42
97 to 112	21	28	35	42	49
113 to 128	24	32	40	48	56

IMPLEMENTED 01/2016

11.9.4 Block securement nails must penetrate the car deck or other attaching member a minimum of 2 in.

11.9.5 When securing small pieces of blocking such as side chocks and wedges, the nails are to be applied in a widely spaced pattern to stabilize the block from twisting.

11.9.6 To the extent practical, when nails or spikes are used to secure blocking, they are to be driven vertically.

11.9.7 Where predrilling is required in a specific figure, nail holes must be predrilled using a bit 1/32 in. smaller in diameter than the applied nail diameter to avoid splitting.

11.9.8 When steel-floored cars are furnished in lieu of wood-floored cars, any floor blocking or metal-anchor plates required under figures or rules to be nailed to wood floors must be bolted to steel floors.

11.9.9 All floor blocking applied to control lateral movement of load on cars equipped with nailable steel flooring must extend, with the use of backup blocking, to the sides of the car. In the case of flatcars, backup blocking must extend to the stub stakes, when stub stakes are required. This requirement does not apply to the composite or combination wood and steel type nailable flooring.

11.10 Forest Product Packages with Attached Dunnage

11.10.1 When attached dunnage is used, bearing pieces and separators must be of sufficient height to prevent attached dunnage from contacting car floor or adjacent package surface.

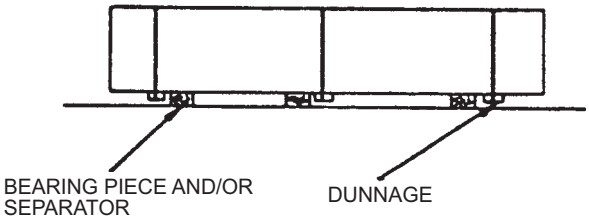

Fig. 11.5 Attached dunnage

11.10.2 Attached dunnage may be applied to either the top or bottom of packages. If applied to the top of packages, all dunnage in the top layer must have one 10-D nail applied in addition to the package band to prevent displacement.

11.10.3 Attached dunnage may be constructed by mechanically laminating the following material combinations: oriented strand board (OSB) to OSB; OSB to spruce pine fir (SPF); SPF to SPF. SPF also may be finger jointed.

11.10.4 Attached dunnage is not permitted on the bottom of bottom-layer packages when loaded on conventional flatcars or on bulkhead flatcars when the total lengthwise void between bottom-layer packages and the bulkheads exceeds 24 in.

IMPLEMENTED 01/2016

12. INFLATABLE DUNNAGE BAGS AND PACK-OUT MATERIALS

12.1 Inflatable Dunnage Bags

12.1.1 Inflatable dunnage bags may be used in open top loading only when permitted in a specific figure.

12.1.2 Inflatable dunnage bags may be used only for one loading and are not reusable.

12.1.3 Effective October 1, 2001, inflatable dunnage bags used in open top loading must be AAR approved as described in Part 7, General Rule 42.

12.1.4 Table 12.1 lists approved inflatable dunnage bags for use in open top loading.

12.1.5 Bags in Table 12.1 are approved for one-trip use only.

Table 12.1 Approved inflatable dunnage bags

The latest update to this table is available on TTCI's Web site at http://www.aar.com/otlr.htm

	Level of Verification	General Description	Date of Verification
Cargo Perfect Co., Ltd.	Level 3	Paper	March 13, 2012
CorrPak Bulk Packaging Systems	Level 2	Polyethylene/Polypropylene	May 21, 2010
CorrPak Bulk Packaging Systems	Level 3	Polyethylene/Polypropylene	May 21, 2010
CorrPak Bulk Packaging Systems	Level 4	Polyethylene/Polypropylene	May 21, 2010
International Dunnage	Level 2	Polyethylene/Polypropylene with Standard Valve	April 9, 2012
International Dunnage	Level 2	Polyethylene/Polypropylene with Safe Lock Valve	February 24, 2012
International Dunnage	Level 3/4	Polyethylene/Polypropylene with Safe Lock Valve	November 8, 2011
International Dunnage	Level 5	Polyethylene/Polypropylene with Standard Valve	June 6, 2012
International Dunnage	Level 5	Polyethylene/Polypropylene with Safe Lock Valve	March 15, 2012
ITW Shippers	Level 2	Polyethylene/Polypropylene "Gorilla Series PP Woven"	March 2, 2011
ITW Shippers	Level 2	Paper with Fast Fill Valve	October 26, 2012
ITW Shippers	Level 3	Paper with Fast Fill Valve	December 12, 2012
ITW Shippers	Level 4	Polyethylene/Polypropylene with SynTex Valve	March 29, 2010
ITW Shippers	Level 4	Polyethylene/Polypropylene "Gorilla Series PP Woven"	March 2, 2011
ITW Shippers	Level 5	Polyethylene/Polypropylene with SynTex Valve	March 29, 2010
ITW Shippers	Level 5	Polyethylene/Polypropylene with Fast Fill Valve	March 29, 2010
ITW Shippers	Level 5	Polyethylene/Polypropylene "Gorilla Series PP Woven"	March 2, 2011
Shanghai Shuangzhong Packing Materials Co. Ltd.	Level 3	Polyethylene/Polypropylene	March 2, 2011
Stopak	Level 2	Polyethylene/Polypropylene with Jumbo Valve	June 10, 2010
Stopak	Level 2	Paper with Jumbo Valve	June 10, 2010
Stopak	Level 3	Paper with Jumbo Valve	June 10, 2010
Stopak	Level 3	Polyethylene/Polypropylene	February 16, 2012
Stopak	Level 4	Polyethylene/Polypropylene with Jumbo Valve	March 30, 2010
Stopak	Level 4	Paper with Jumbo Valve	March 2, 2011
Stopak	Level 5	Polyethylene/Polypropylene with Jumbo Valve	March 30, 2010
UNSA America LLC	Level 3	Polyethylene/Polypropylene	May 21, 2010

Level 2 = Acceptable for use in load weights less than 75,000 lb

Level 3 = Acceptable for use in load weights from 75,000 lb to 160,000 lb

Level 4 = Acceptable for use in load weights from 160,000 lb to 216,000 lb

Level 5 = Acceptable for use in load weights from 160,000 lb to 216,000 lb

IMPLEMENTED 01/2016

IMPLEMENTED 01/2016

12.2 Honeycomb Cell Void Filler Material

12.2.1 Honeycomb or similar cell void filler material must be AAR approved for use in open top loading.

12.2.2 Honeycomb or similar cell void filler material is not acceptable for use in General Rule loads and may only be used in open top loading when permitted in a specific figure and all other requirements are followed.

12.2.3 Void filler material must be constructed with a cell-type configuration approximating the design concept shown in Fig. 12.1.

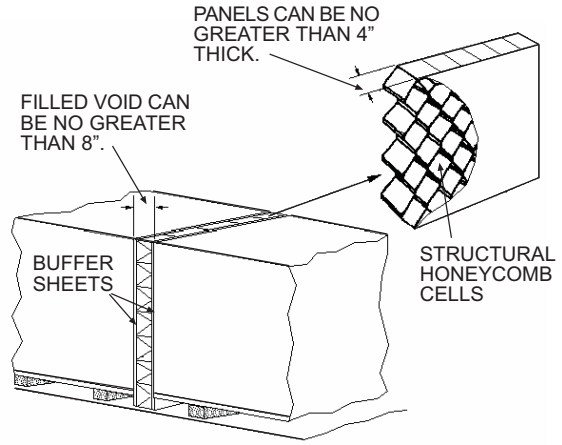

Fig. 12.1 Honeycomb void filler material

12.2.4 Unless otherwise specified, compression strength must be 20 psi or greater, and each filler piece may be no thicker than 4 in.

12.2.5 More than one filler piece may be placed together to fill a total void space of not more than 8 in. When permitted in a figure, separate void spaces of no more than 8 in. each may be filled with approved void filler.

12.2.6 When honeycomb filler is constructed of paper or other porous material and is used in a figure load, it must be completely protected with a separate plastic covering, water proofing, or other effective means of protecting it from liquid infiltration. This is in addition to any load covering that may be used.

12.2.7 A buffer of uniformly thick sheet product (such as hardboard, gypsum, or plywood, etc.) is to be applied between the filler piece and the commodity to disperse loading and to avoid a concentrated impact.

12.2.8 Filler material may not be reused if it has been damaged (e.g., showing evidence of creasing or depressions in the outer cover sheets, deformation to the core structure, etc.), has been subjected to liquid infiltration, or otherwise does not retain its manufactured compression strength rating.

12.2.9 Table 12.2 lists approved filler material and manufacturer.

Table 12.2 Approved void fillers

Company	Product Name/Model	Type of Filler	Primary Material
Southern Bracing Systems, Inc.		Small honeycomb cell	Kraft paper
The Damage Prevention Company	Protecto-Cell Panel	1/2-in. honeycomb cell	Kraft paper
Pregis	Hexacomb	3/4-in. honeycomb cell	Kraft paper

12.3 Corrugated Void Filler (CVF)

12.3.1 Corrugated void filler (CVF) must be AAR approved for use in open top loading.

12.3.2 CVF is not acceptable for use in General Rule loads and may be used in open top loading only when permitted in a specific figure and when all other requirements are followed.

12.3.3 CVF is constructed of multi-wall corrugated fiberboard, assembled with the corrugations oriented in the same direction for strength. The strength of the material is optimized with the load applied against the end of the corrugations as shown in Fig. 12.2.

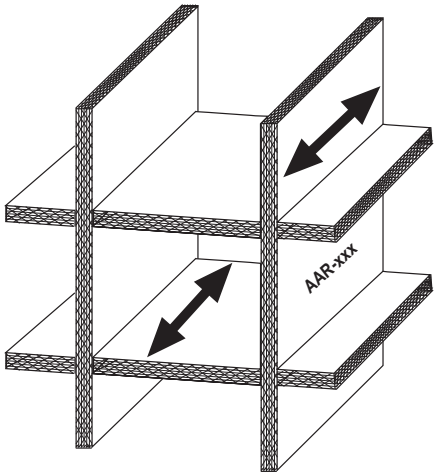

Arrows indicate orientation against load.

Fig. 12.2 Approved CVF design

12.3.4 Table 12.3 lists approved filler material and manufacturer.

Table 12.3 Approved CVF product

Company	Product Name/Model	AAR Marking
Damage Prevention Co.	Space Brace	AAR-DPC

12.3.5 Approved CVF must be marked with the AAR-issued marking, as listed in Table 12.3, in block letters at least 1/2 in. high, using a contrasting color. Markings are to be located so as to be visible from the side of the railcar with the filler in its applied position.

12.3.6 The CVF material must be applied to the load with the corrugations running lengthwise of the car. CVF must be constructed or otherwise braced to prevent displacement or a change in its orientation with the load, even under severe vibration.

12.3.7 CVF material must be completely protected from environmental elements and liquid infiltration using a separate plastic covering or other effective means of protection.

12.3.8 A buffer of uniformly thick sheet product (such as hardboard or plywood) is to be applied between the filler piece and the commodity to disperse loading and to avoid weakening, end-damage to the CVF.

12.3.9 CVF material may not be reused if it has been damaged (e.g., showing evidence of damage to the end of corrugations, creasing, depressions, or deformation to the core structure, etc.) or subjected to wet damage, or if it otherwise does not retain its manufactured compression strength rating.

12.3.10 Unless otherwise specified in the figure, the CVF must meet the following conditions:

12.3.10.1 The CVF must be at least equal to the height of the load.

12.3.10.2 When applied on cushion-equipped cars, the CVF must have a combined crush strength equal to the weight of the load.

12.3.10.3 When applied on cars with standard draft gear systems and without cushioning devices, the CVF must have a combined crush strength equal to twice the weight of the load.

12.3.10.4 The CVF must not exceed 18 in. in length (represented by arrows in Fig. 12.2) or be applied end-to-end in the same void space.

12.3.10.5 When applied to a load, CVF must be used in conjunction with inflatable dunnage bags, but the two must not be applied within the same void space.

IMPLEMENTED 01/2016

IMPLEMENTED 01/2016

12.4 Lengthwise Void Securement

12.4.1 From time-to-time lengthwise voids remain in the load that require void securement. The lengthwise void should be secured with a wood framing structure or wooden bulkhead providing 1,500 lb/ft^2 retaining strength. Bulkheads are used to secure the remaining lengthwise void space between two sections of lading to prevent shifting and to permit unloading of lading. As a rule of thumb, the length of the void cannot exceed 11 times the thickness of the lumber used for lengthwise securement/fill. For example, using 4-in. lumber, the length of the void cannot exceed 44 in. To be effective, the bulkhead must be of uniform strength over the face of the lading. The lading also must have a uniform face on each side. The bulkhead must be equal to the height and width of the lading.

12.4.2 When necessary to protect the lading and to disperse the retaining forces, a uniform thick buffer sheet (such as hardboard, plywood, etc.) is to be attached to the bulkhead or placed between the lading and bulkhead.

12.4.3 Bulkhead Construction

All lumber must be hardwood of good quality, straight grained, and free of decay and strength-impairing knots.

Crossbraces:	2 in. × 6 in. × width of the lading. Crossbraces can be constructed vertically or horizontally; to be determined by the lading.
Crossbrace Support:	1 in. × 2 in. × height of the bulkhead. Designed to hold the bulkhead together until the spreaders are attached. Can be placed vertically or horizontally depending on the direction of the crossbraces.
Spreader Support:	2 in. × 4 in. × width of the lading. To be nailed horizontally across the crossbraces. Spreaders are to be toe-nailed into the spreader supports.
Spreaders:	See lumber chart for lumber size × 1 in. longer than the lengthwise void.
Spreader Holddowns:	2 in. × 4 in. × length between crossbraces. To be nailed into the spreaders and crossbraces to prevent spreader buckling.
Buffer Material:	1/2 in. material (such as hardboard, plywood, etc.) placed between the product and bulkhead, if necessary.

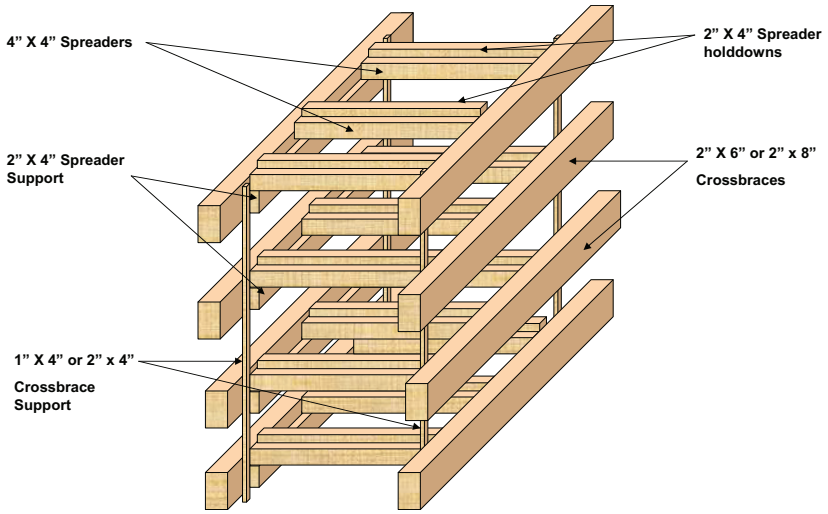

Fig. 12.3 Example of lengthwise void securement bulkhead

13. LATERAL LOAD PROTECTION

13.1 Side Stakes

13.2 Unless otherwise provided for in the individual figures of Sections 2 through 6, when more than 50% of the top layer of a multiple-layered load extends above the top of the car side or ends, side stakes must be used.

13.3 Unless otherwise specified, use at least 3 pairs of stakes per pile 20 ft long or less and 4 pairs per pile more than 20 ft long.

13.4 Lumber for stakes must be hardwood, in accordance with Rule 10.1. It is permissible to substitute wood stakes with suitable metal pieces of at least equal strength. When metal items or permanent side stakes are specified, wood substitutions are not permitted.

13.5 When permanent stakes are required, unless otherwise specified, wooden fillers may be applied to steel channels, H-beams, etc., provided they are secured against displacement.

13.6 Residual cores from veneer logs are not acceptable as stakes.

13.7 Unless otherwise specified, the minimum dimensions of sawed stakes must be as follows:

13.7.1 For cars having sides less than 30 in. high, stakes must be 4 in. × 5 in. with the length as required.

13.7.2 For cars having sides 30 in. high or over, stakes must be 4 in. × 4 in. with the length as required.

13.8 Stakes must fully fit into stake pockets or be wedged to provide a tight fit and secured as shown in Fig. 13.3. The tapered end on 4 in. × 5 in. stakes must not be less than 4 in. × 4 3/4 in. when measured at the top of the stake pocket.

13.9 When metal stakes do not accurately fit the stake pockets, they must be wedged or built up to fill the pockets and secured so they cannot slip through the pocket.

13.10 Stakes may be placed outside of stake pockets on the inside of gondola cars having sides 30 in. high or over, provided the stakes rest on the car floor and are secured to the car sides or tightly wedged against the car sides by the lading.

13.11 Green Saplings as Side Stakes

13.11.1 Green saplings of the species listed in Rule 10.1 may be substituted for sawed stakes only when specified under the figures. When used, they must be tapered to fully fit the stake pockets. For the purpose of this rule, a green sapling is a recently cut young tree, that, at the time of application, meets the following conditions:

13.11.2 The moisture content of the wood still exceeds the saturation point as evident by a minimum of 30% moisture content. (Note: Field testing of moisture content may be measured using a commercial handheld resistance-type electronic meter designed for such use.)

13.11.3 The ratio of sapwood to heartwood is at least 2 to 1 on a radius from bark to center as illustrated in Fig. 13.1.

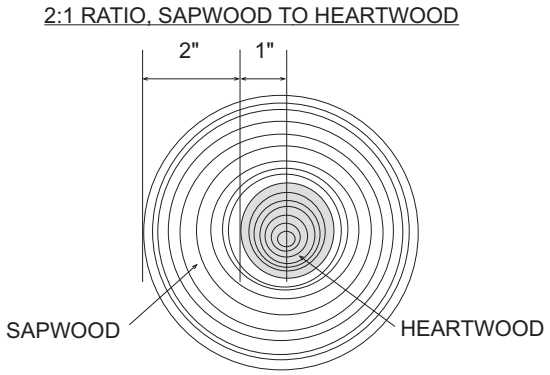

Fig. 13.1 Green sapling cross-section

13.11.4 The diameter of green saplings used in place of 4 in. × 5 in. stakes must be 5 in., and when used in place of 4 in. × 4 in., they must be 4 1/2 in. Sapling diameter is to be measured at a point midway between the top and bottom of the stake at its full applied length.

13.11.5 The tapered end on green sapling stakes must not be less than 4 in. × 4 3/4 in. when measured at the top of the stake pocket.

IMPLEMENTED 01/2016

IMPLEMENTED 01/2016

13.12 Laminated Side Stakes

13.12.1 The use of laminated side stakes is permissible under all figures except those for poles. Stakes are to be laminated in the following manner:

13.12.1.1 Material must conform with requirements of this rule with respect to wood species, total dimension, and securement.

13.12.1.2 All pieces used must be the full length of the completed stake. Laminated pieces must be at least 2 in. thick. Dressed lumber as described in Rule 10.4 may be used.

13.12.2 The laminated pieces must be straight and contact at least 80% of the adjoining surfaces.

13.12.3 Each lamination must be joined using common nails that are at least 2 in. longer than the lamination. The nails must be spaced approximately 9 in. apart and staggered. Apply an equal number of nails from each side.

13.12.4 Stakes must be applied with the edges of the lamination toward the load as shown in Sketch 1 of Fig. 13.2.

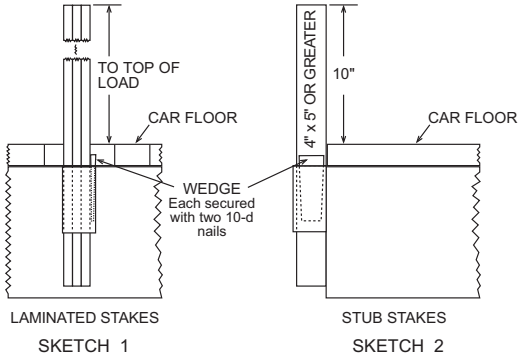

Fig. 13.2 Stakes, laminated and stub

13.12.5 If dressed lumber is used, a suitable wedge filler piece must be securely wedged between the stake pocket and the stake so as to completely fill any void space and to tighten the stake in the pocket. The wedge pieces must be secured to the side of the stake with two 10-D nails.

13.13 Stub Stakes

13.13.1 Stub stakes must be at least 4 in. × 5 in., tapered to fully fit the stake pocket.

13.13.2 When stub stakes are used, they must extend from the bottom of stake pocket to 10 in. above the car floor, unless otherwise specified.

13.13.3 Laminated stub stakes are permitted. When used, they must be constructed of lumber, 2 in. × 6 in. or larger. Each lamination must be a single piece, full length, and secured with four 16-D nails equally spaced.

13.13.4 When stub stakes do not completely fill stake pockets, a wedge-shaped filler piece must be applied to fill the void and be secured to prevent displacement. Refer to Sketch 2 of Fig. 13.2.

13.14 Examples for Securing Stakes

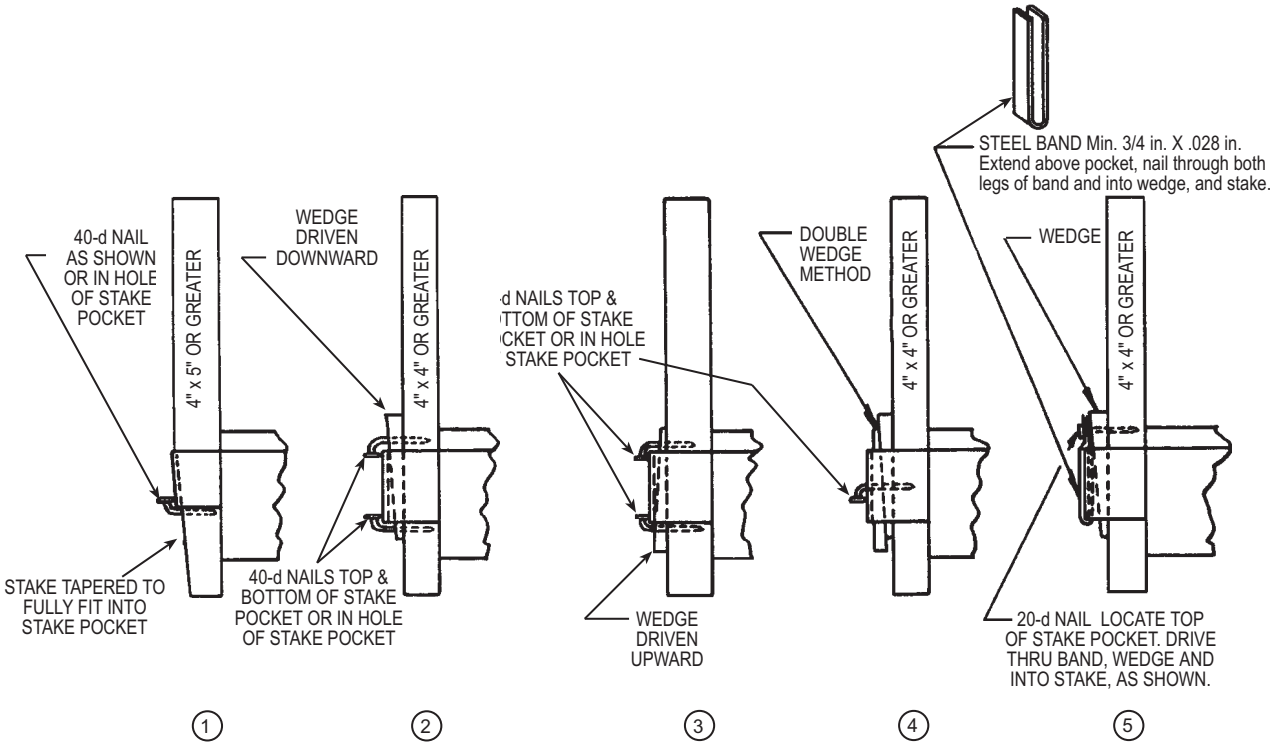

Fig. 13.3 Stake securement

13.15 Unless otherwise specified, each pair of side stakes must be tied together across the top of the load with any of the following items:

13.15.1 For piles 12 in. or less above gondola car sides or flatcar floor.

Boards—one 1 in. × 5 in., nailed to ea. stake with five 10-D nails
No. 7, 8, or 9 gauge annealed wire—two strands
No. 11 gauge annealed wire—four strands
High tension band—one-load strength 2,000 lb
High tension wire—one-load strength 2,000 lb

13.15.2 For piles more than 12 in. above gondola car side or flatcar floor.

Boards—two 1 in. × 5 in., nailed to each stake with five 10-D nails
No. 7 gauge annealed wire—two strands
No. 8 gauge annealed wire—three strands
No. 9 gauge annealed wire—four strands
No. 11 gauge annealed wire—six strands
High tension band—one-load strength 2,000 lb
High tension wire—one-load strength 2,000 lb
†High tension wire—one-load strength 1,275 lb
†Note—Applies only to Section 5.

13.15.3 Such fastenings need not be used when the top tier of steel H- and I-beams with flanges 6 in. wide or more are loaded horizontally, and the lower edges of the flanges extend at least 2 in. below the top of the car sides and are confined inside the flanges of the beams underneath.

IMPLEMENTED 01/2016

13.16 Tying Stake Wires

13.16.1 Fig. 13.4 illustrates the method used to tie opposing stakes with wire.

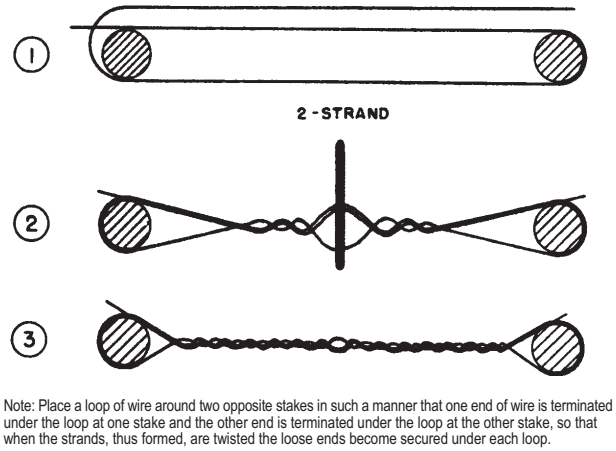

Note: Place a loop of wire around two opposite stakes in such a manner that one end of wire is terminated under the loop at one stake and the other end is terminated under the loop at the other stake, so that when the strands, thus formed, are twisted the loose ends become secured under each loop.

Fig. 13.4 Stake tying method

13.16.2 One strand wrapped around a pair of opposing stakes, with both ends tied together, forming a complete loop, constitutes two strands. In other words, each complete loop formed adds two additional strands. Any number of complete loops may be formed with a single strand, provided both ends of the continuous strand forming such loops are tied together.

13.16.3 The number of strands specified, when not forming a complete loop with both ends tied together, must be applied in cases where each end of such wires is attached to the stake pocket or other fixed point of attachment.

13.16.4 The above items must be located about 2 in. above the top of the load, unless otherwise specified. Wires must be twisted taut.

13.17 Use staples or bent-over nails to prevent bands or wires from working off stakes or binders.

13.18 Boards, when used to retain adjacent stakes in a vertical position longitudinally, are to be applied lengthwise of the car and must be nailed to the inside face of the stakes.

13.19 Side stakes used for loads in gondola cars, unless otherwise covered in a specific figure, must be secured so as to remain in a nominally vertical position to protect the load.

IMPLEMENTED 01/2016

13.20 Guide Rail Securement Devices (GSDs)

13.20.1 Fig. 13.5 illustrates approved guide rail securement devices (GSDs) that are to be used in the application of guide rails when used as a substitution for stub stakes, where required, in packaged lumber figures in Section 5.

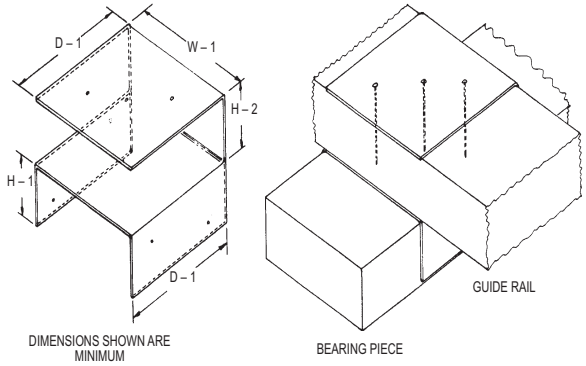

Formed from one piece of 20 gauge steel, shaped as shown.
W-1—Width to be a minimum of 3 1/2 in., or equal to but not more than 1/15 in. greater than width of floor-bearing pieces.
D-1—Depth to be a minimum of 3 1/2 in., or equal to but not more than 1/4 in. less than the width of guide rail.
H-1—Bottom height to be a minimum of 1 1/2 in., or equal to but not more than 1/4 in. less than thickness of floor-bearing pieces.
H-2—Top height to be a minimum of 1 1/2 in., or equal to but not more than 1/8 in. greater than thickness of guide rail.

Fig. 13.5 Guide rail securement devices (GSDs)

13.20.2 Locate on first two bearing pieces at each end of load and every other bearing piece between, on each side of load, so that the interior panel is resting firmly on top of the bearing piece, with the back panel approximately 1/2 in. from base of load. Secure each to the bearing piece with four 2-in. common nails, two each side of bearing piece, driven horizontally. Guide rail is to be inserted firmly against the back panel and secured with three nails 2 in. longer than thickness of guide rail.

14. ATTACHMENT OF SECUREMENT

Holes, Slots, Stake Pockets, Strap Anchors, and Welding

14.1 Securement items must not be attached to or interfere with a car's safety appliances, which include handholds, handrails, ladders, walkways, handbrakes or wheels, coupler operating levers, etc.

14.2 The welded application of any securement anchor device must be made in compliance with Rule 14.13.

14.3 The strength of a securement anchor device, after attachment, must be at least equal to the strength of anchors specified in Standard S-230 in Section C (latest revision) of the AAR *Manual of Standards and Recommended Practices*.

14.4 Notwithstanding, any points of attachment must be at least as strong as the securement being attached. This also applies to stake pockets on flatcars and inside gondola cars.

14.5 When necessary to apply strap anchors to a car, strap anchors manufactured for this purpose should be used. If absolutely necessary, U-bolts or closed I-bolts at least 3/4 in. in diameter or similar devices may be used for securing bands to car bodies except as otherwise specified.

14.6 When a figure requires wires or bands to be secured to stake pockets, it is permissible as an alternative for these items to be secured to deck-level lading strap anchors provided the strength of the anchors is in accordance with Rule 14.3.

14.7 Cables, rods, or chains are not to be attached to lading strap anchors.

14.8 It is prohibited to make holes in any structural member of the car, such as center, side, and end sills, corner posts, top chord angles, car side stakes, and other structural members of the car's underframe, without the explicit permission from the car owner, and then only to the extent permitted by the *AAR Interchange Rules*.

14.9 Making holes or slots in heavy duty flatcars, such as well-hole, depressed-floor, transition areas, or specially designed cars, or in transition areas of such cars, may be done only with explicit permission from the car owner. For other cars, every effort must be made to avoid cutting unnecessary holes or slots and to confine them to the minimum number and dimensions required to secure the load.

14.10 It is preferred that securement holes be drilled, not torch-cut, to reduce the spread of fatiguing cracks and to prevent making holes larger than necessary.

IMPLEMENTED 01/2016

14.11 Holes not exceeding 1 1/2 in. in diameter may be made in car bodies (excluding structural members as described in Rule 14.8) for the application of wires, bolts, or rods. Holes not exceeding 1 in. in diameter may be made in top chord angles, provided they are drilled only.

14.12 Slots 1/2 in. × 2 1/2 in. may be made in car bodies (excluding top chord angles, stakes, braces, and sills), except when equipped with lading strap anchors. The length of the slot must not exceed 1 1/2 in. for the application of wires or bands.

14.13 Welding of Securement

14.13.1 The quality of the welding performed is the responsibility of the organization and its contractors and they shall perform whatever tests are necessary to meet the requirements of American Welding Society (AWS) D15.1, Railroad Welding Specification for Cars and Locomotives.

14.13.2 Requirements contained herein constitute acceptable industrial practices. They are not intended as a substitute for engineering judgment with respect to the suitability of application of listed joints to a welded structure.

14.13.3 Welding of any load anchors and/or securement items must be performed by a welder certified in accordance with applicable AAR specifications or with AWS D15.1.

14.13.4 Any load anchor and/or securement item welded to approved railcar structure must be prequalified base metal and/or filler metal per AWS D15.1. All prequalified base metals and filler metals are listed in AWS D15.1, Clause 8. Any unlisted base or filler metals shall be qualified by test as described in AWS D15.1, Clause 10.

14.13.5 The items and area to be welded must be clean, structurally sound, and prepared in a manner consistent with AWS standards.

14.13.6 Welding lading directly to a car is prohibited.

14.13.7 Welding to nailable steel flooring is prohibited.

14.13.8 Welding in transition areas on depressed-center flatcars is prohibited unless otherwise specified on car (see Fig. 14.1).

Fig. 14.1 Weld instructions on depressed-center flatcar transition areas

14.13.9 The welding of such items as rods, flat bars, and straps directly to both the load and car for the purpose of securing the load is prohibited unless otherwise provided for in a specific figure.

14.13.10 One end of the aforementioned items may be welded to either the load or car and the opposite end secured in an approved manner.

14.13.11 Slotted angles, eye bolts, and similar devices may be bolted or welded to the load or the car body for the application of rods, flat bars, and straps. When they are bolted to the load and car, the connecting securement items may be welded. When they are welded to the load and car, the connecting securement items must not be welded but are to be attached in an approved alternative manner.

14.13.12 The strength of such attachment devices and the portion of the load or car to which they are attached must equal the breaking strength of the securement item.

14.13.13 See Appendix D, Table D.3 for weld yield values by fillet size and electrode class.

IMPLEMENTED 01/2016

15. NAILS, STAPLES, AND LAG SCREWS

15.1 Common Nails

15.1.1 Nail-holding power is dependent on the wood that is holding the nail point being in good condition. If wood quality is questionable, consider replacing the nails with wood screws or bolts (preferable) or rejecting the car.

15.1.2 Where nails are designated by pennyweight (for example "40-D") in the rules and detailed figures, they may be either common or cement-coated, unless otherwise specified. Table 15.1 lists nail pennyweights and their relative sizes. An expanded version of this table that lists nail pennyweights, relative sizes, and shear yields is provided in Appendix D, Table D.4.

Table 15.1 Nail sizes

Size of Common Nails				Size of Cement-Coated Nails			
8-D	2 1/2 In.	20-D	4 In.	8-D	2 3/8 In.	20-D	3 3/4 In.
9-D	2 3/4 In.	30-D	4 1/2 In.	10-D	2 7/8 In.	30-D	4 1/4 In.
10-D	3 In.	40-D	5 In.	12-D	3 1/8 In.	40-D	4 3/4 In.
12-D	3 1/4 In.	50-D	5 1/2 In.	16-D	3 1/4 In.	60-D	5 3/4 In.
16-D	3 1/2 In.	60-D	6 In.				

15.2 Power-Driven Nails

15.2.1 Power-driven nails and/or staples may be used, but the number specified in the applicable figure must be increased by one-third. The approved size substitution is listed in Table 15.2. In Appendix D, Table D.5, provides shear yield values by relative size.

Table 15.2 Nail and staple size substitution

Common Nail	Power-Driven Nail	Power-Driven Staple	
		Diameter	Leg Length
8-D	8-D or 10-D	.080	$2^1/_2$ in. or $2^3/_4$ in.
10-D	8-D or 10-D	.080	3 in. or $3^1/_4$ in.
16-D, 20-D	16-D or 20-D	.080	$3^1/_2$ in.
30-D	30-D		
40-D	40-D		

15.2.2 Power-driven nails and/or staples may be used in a General Rules load. However, the number of nails must be double the quantity of conventional hand-driven nails. Reference Table 11.2, and double the number required for the stated width and length.

15.2.3 Table 15.3 lists manufacturers and sizes of power-driven nails and staples that have been AAR tested and approved.

Table 15.3 Approved nail and staple sizes

Manufacturer	Power-Driven Nail Sizes	Power-Driven Cement Coated Nail Sizes	Power-Driven Staple Sizes
Paslode	8-D, 16-D, 20-D, 30-D, and 40-D		
Senco	8-D, 10-D, 16-D		.080 × $2^1/_2$, $2^3/_4$, 3, $3^1/_4$ and $3^1/_2$
Duo-Fast Corporation	8-D and 10-D	16-D, 20-D, 30-D, 40-D	
Acme Steel, Canada, Ltd.	16-D, 20-D, 40-D		

IMPLEMENTED 01/2016

15.3 Nailing and Nail Substitutions on Nailable Steel Floors

15.3.1 Nailable steel floors are designed for using 20-D common nails. The holding power of nailable steel floors is superior to wood-decked cars. If a figure calls for securing floor dunnage to a wood deck using 20-D common nails, reduce by 25% the number of 20-D nails required to secure to a nailable steel floor at the floor joint.

15.3.2 Smaller-dimensioned 16-D nails may be used to secure floor dunnage in nailable steel floors under the following substitution rules:

15.3.2.1 If a figure calls for 20-D nails in a wood deck car, and a nailable steel floor car is used, increase the number of 16-D nails by 50% over the number of 20-D nails provided for in the figure.

15.3.2.2 If a figure calls for 20-D nails in a nailable steel floor car, double the number of 16-D nails used.

15.3.3 Various methods of driving nails into nailable steel floors have been tested. For manually driven nails, pre-drilling the holes and using a 3-lb mallet works best. Lighter hammers tend to cause more frequent nail bending. Also, pneumatic-driven hammers with hundreds of blows per minute work fine with pre-drilled holes where the nail is held vertical.

15.4 Lag/Wood Screws

15.4.1 Screw-holding power is dependent on the wood that is holding the screw point being in good condition. If wood quality is questionable, consider replacing the screws with bolts or rejecting the car. Shear yield tables can be found in Appendix D, Tables D.6 and D.7.

15.4.2 Lag/wood screws 1/4 in. in diameter may be used to replace 20-D nails on a one-for-one basis. Lag/wood screws 3/8 in. in diameter may be used to replace 20-D nails on a one-for-two basis.

15.4.2.1 Lag/wood screws may be used where nails are specified. When used, they must be properly applied by predrilling and torquing by mechanical means. Lag screws must not be driven by hammering.

15.4.2.2 The length of the lag/wood screw must be at least 2 in. longer than the thickness of the piece being secured.

16. BOLTS, RODS, BAR, AND PLATE

16.1 Rods or bolts having rolled threads of the same diameter as that of U.S. Standard cut threads may be used. Bending of threaded portion of rods or bolts is prohibited. All-thread rod may be used in General Rules loads per the minimum breaking strengths identified in Appendix D, Table D.11. All-thread rod is not to be used in figured loads unless specifically identified and allowed.

16.2 When rods are used for tie-downs passing through large-diameter holes in the lading, a plate or plates of sufficient strength to prevent bending must be placed between the lading and the nut of the rod.

16.3 When rods, bolts, etc., used to secure loads not covered in specific figures are passed through the car floor, a backup piece consisting of either a 4 in. × 4 in. × 18 in. hardwood cleat or a steel plate 1/2 in. × 4 in. × 18 in. must be placed lengthwise of the car under the floor directly against the flooring.

16.4 The length of steel backup plate may be reduced to 1/2 in. × 4 in. × 6 in. on floors constructed of steel plate (not including nailable steel flooring).

16.5 When rods, etc., pass through a stake pocket, a 1/2 in. × 4 in. × 10 in. steel backup plate must be placed lengthwise of the car and centered under the stake pocket.

16.6 The use of rods with open-hook ends as securement is prohibited.

16.7 Where bolts are specified for clamping pieces to prevent the wood from splitting, they must be applied in accordance with Rule 11.8.2. Such bolts may be substituted with 1 1/4-in. high tension bands in accordance with Rule 11.8.2.

16.8 The bending of rods around stake pockets and then welding the overlapping portion to the main rod is prohibited.

16.9 Rods should be located so that they are not in contact with each other. When rods do contact each other, suitable means to prevent chafing or wear must be provided.

16.10 One splice is permitted for securement items 18 ft or less in length made from bars and/or rods. When necessary to increase length, one splice may be added for each additional 18 ft or less in length.

16.11 When necessary to weld rod to flat bar or rods for the purpose of securement or when necessary to splice the tie-down item to increase length, there must be sufficient overlap with continuous weld on both sides to equal the strength of the original securement item.

16.12 All welding must be performed in accordance with Rule 14.13.

16.13 To retain nuts in their original position, three or more threads on rods or bolts must be nicked, chisel-checked, flattened, or otherwise distorted immediately behind single or double nuts, or nuts may be tack welded to the rods to ensure that the nuts will not back off.

IMPLEMENTED 01/2016

16.14 When less than three threads extend beyond the nuts, there must be at least a sufficient length of rods or bolts extending, which must be riveted over to prevent the nuts from backing off.

16.15 The provisions of Rules 16.13 and Rule 16.14 are not required when nut locks or lock nuts are used. Lock nuts may not be reused unless otherwise stated in these rules or in a specific figure. Lock washers are not acceptable substitutes.

16.16 Cable clamps and/or clips, once properly torqued, do not require the application of lock nuts, nut locks, lock washers, or thread deformation.

16.17 See Appendix D, Tables D.8, D.9, and D.10 for shear yield and Table D.11 for minimum breaking strength for bolts and rods.

16.18 Refer to General Rule 25 for substitution restrictions.

16.19 See Appendix D, Table D.12 for minimum breaking strength for flat bar and plate.

16.20 Several factors can reduce the minimum breaking strength of a rod or bar, as illustrated in Fig. 16.1:

- If the rod is threaded, the root thread changes the diameter of the rod at that location, reducing the minimum breaking strength to 85% of the unthreaded rod.
- When the rod is bent, that location is subject to a shear failure factor of 58% of the minimum breaking strength.
- If heat applied to bend the rod exceeds 600 °F, minimum breaking strength is adversely affected.

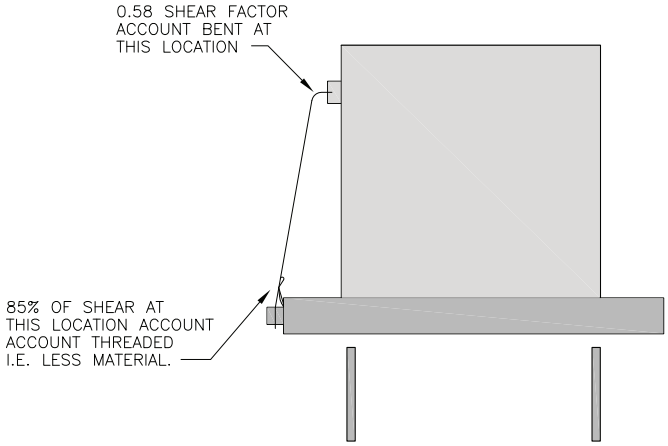

Fig. 16.1 Shear factor adjustments

Table D.11 in Appendix D takes into account these considerations.

IMPLEMENTED 01/2016

IMPLEMENTED 01/2016

17. STEEL BANDING

17.1 Scope

17.1.1 This rule governs the requirements for steel banding (bands or banding), related components, and equipment as applied to the securement of commodities for shipment on open top railcars.

17.1.2 All banding must be AAR approved in accordance with Rule 43.1.

17.1.3 All approved steel banding, regardless of size, must be marked in accordance with Rule 17.9.

17.1.4 Shippers must be in a position to show that banding used for securement meets AAR requirements.

17.1.5 In the context of these rules, the term high tension bands, found in many of the load figures throughout Sections 2 through 7, is synonymous with high-tensile steel banding as listed in these rules.

17.2 General Use and Application

17.2.1 When applied in the securement of open top loads, only banding appropriate for the specific application is to be used. Band sizes identified as package bands may only be used as securement bands when approved in a specific figure. Securement bands may also be used as package, unitizing, interlacing, layer, or encircling bands. (Refer to General Rule 25 for additional information on substitutions.)

17.2.2 Banding shall be applied in a manner consistent with these rules and the recommendations and guidelines as issued by the manufacturer of the banding, tensioning, and sealing equipment. Failure to follow such guidelines will be considered a violation.

17.2.3 Proper tension is critical to a banding's effectiveness. When using pneumatic or other powered tensioning and sealing equipment, the manufacturer's recommended operating pressure and tension values must be strictly followed. When using pneumatically operated equipment, the length of the air transmission line will affect the final output pressure. Design of the pneumatic system and configuration should be established by a qualified technician to ensure the proper operating pressure is being achieved at the tool to avoid over- or under-tensioning banding. Any pneumatic- or power-operated tensioning system must be periodically and routinely checked and maintained for proper operation and performance.

17.2.4 Before applying load and securement banding, a plan must be developed giving due consideration to the location of the banding relative to potential contact with other bands, bearing pieces, separators, chocks, stabilizers, blocking, stakes, and any other objects that could foul or snag the banding in the event the load moves or shifts during transit. Every effort must be made to space and locate banding so as to accomplish the intended load restraint and provide the maximum clearance from such objects in order to minimize the possibility of band breakage or dunnage displacement.

17.2.5 Bands encircling a pile or load should be tensioned with a power strapping tool, as opposed to using a manual tensioning strapping tool, and, when possible, sealed on top of the load. Bands must be located a reasonable distance from the end of the load to avoid the band slipping past the end of the load. When possible, it is recommended that encircling and unitizing bands be tightened once the complete load is placed on the car to allow for the weight of the upper lading to compress the material in the lower layers.

17.2.6 Bands attached to stake pockets must be sealed no closer than 18 in. from the top of' stake pockets as illustrated in Fig. 17.1. This does not apply to bands attached to permanently mounted, specifically designed band anchors.

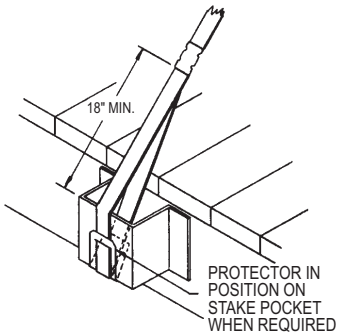

Fig. 17.1 Anchoring bands to stake pockets

17.2.7 Unless otherwise specified, metal corner or edge protection must always be applied between banding and any sharp or acute angles that may be capable of cutting or weakening the banding. This includes attachment anchorage points.

17.2.8 Free ends of bands must not extend more than 12 in. from seals. Banding in excess of 12 in. must be removed.

17.2.9 When securement bands have a free span of 6 ft or more between points of contact, a dampening method must be applied to prevent excessive vibration of bands caused by wind turbulence. Such vibration can result in accelerated band failure as a result of metal fatigue.

17.2.10 Steel bands must be applied to packages and/or loads with markings facing outward.

17.2.11 Welding of steel bands is prohibited except where required in the process of manufacturing or as provided for in Rule 17.6.4.

17.2.12 All bands must be tight at origin. Loose or sagging bands must be replaced, with loose bands removed. Contributing factors to loose bands include loose loading, fluctuating tool air supply, nature of lading (compressible versus rigid), sequence of banding application, etc. If encountering loose bands, assess from the list above and/or contact your band tooling manufacturer for assistance. The splicing of bands is prohibited unless otherwise permitted in a specific figure.

17.2.13 Once a steel band has been tensioned and the tension has been released for any reason, including cut or broken banding, it is considered used or secondhand. Used or secondhand banding may not be used or reapplied in load securement.

17.2.14 Punched steel anchor banding 1 1/4 in. × .031 in. with a minimum breaking strength of 3,500 lb may be used to secure loose or boxed materials to car floors unless otherwise specified. Such banding applications must meet the requirements of General Rule 5.

IMPLEMENTED 01/2016

IMPLEMENTED 01/2016

17.3 Banding and Joint-Strength Standards

17.3.1 High-Tensile Steel Banding

Table 17.1 lists mandatory characteristics and requirements, including minimum seal and joint applications, for high-tensile banding.

Table 17.1 Steel banding, high tensile

Banding				Seal/Band Compatibility		Joint Type Deformation Applications				
Width & Thickness (in.)	Width & Thickness (mm)	Minimum Breaking Strength (lb)	Minimum Joint Strength 75% of MBS (lb)	[a]Applicable Seals		Minimum No. Pairs of [b]Notches on Joint	Minimum No. Pairs of [c]Crimps on Joint			
				[b],[d]Notch Type	[c]Crimp Type	Surface Finish All Types	Surface Finish			
							Not Waxed		[e]Waxed	
Package Bands										
1/2 × .020	12.70 × .51	1280	960	NA, NB, NC	Not applicable for this size range	2	N/A		N/A	
1/2 × .023	12.70 × .58	1280	960	NA, NB, NC		2	N/A		N/A	
5/8 × .020	15.87 × .51	1600	1200	NA, NB, NC		2	N/A		N/A	
5/8 × .023	15.87 × .58	1600	1200	NA, NB, NC		2	N/A		N/A	
3/4 × .020	19.05 × .51	2000	1500	NA, NB, NC		2	N/A		N/A	
3/4 × .022	19.05 × .56	2280	1710	NA, NB, NC		2	N/A		N/A	
3/4 × .023	19.05 × .58	2280	1710	NA, NB, NC		2	N/A		N/A	
3/4 × .025	19.05 × .64	2280	1710	NA, NB, NC		2	N/A		N/A	
3/4 × .029	19.05 × .75	2850	2140	ND, NE, NF		2	3		N/A	
3/4 × .031	19.05 × .79	2850	2140	ND, NE, NF		2	3		N/A	
3/4 × .035	19.05 × .89	2850	2140	ND, NE, NF		2	3		N/A	
3/4 × .044	19.05 × 1.12	4050	3040	ND, NE, NF		2	4		N/A	
1 1/4 × .020	31.75 × .51	3200	2400	ND, NE, NF		2	N/A		N/A	
1 1/4 × .025	31.75 × .64	3680	2760	ND, NE, NF		2	N/A		N/A	
Securement Bands							**Std.**	**Grit**	**Grit**	
1 1/4 × .029	31.75 × .75	4750	3565	ND, NE, NF	CD, CE, CF	2	3	3	4	
1 1/4 × .031	31.75 × .79	4750	3565	ND, NE, NF	CD, CE, CF	2	3	3	4	
1 1/4 × .035	31.75 × .89	4750	3565	ND, NE, NF	CD, CE, CF	2	3	3	4	
1 1/4 × .044	31.75 × 1.12	6750	5065	NF, NH	CF, CH	4	4	4	4	
							Std.	Grit	Std.	Grit
2 × .044	50.80 × 1.12	10600	7950	NH, NH-1, NJ, NK	CH, CJ, CK, CL	4	4	4	6	4
2 × .050	50.80 × 1.27	10600	7950	NH, NH-1, NJ, NK, NL, NM	CH, CJ, CK, CL, CM	4	4	4	6	4

[a]Refer to Table 17.3 for seal designation.
[b]Notches on joints for package, unitizing, and encircling bands
[c]Securement (floating load) and tie-down (anchored to car) bands
[d]Notch-type joints may be used only for packaging, unitizing, interlacing, layer, or encircling band applications and may not be used to secure loads to the car or on bands encircling the entire load of a floating load design. Unless otherwise specified, applicable crimp-type joints may be used for all seal-joint banding applications for open top loading. See for band definitions.
[e]Wax coating is sometimes used on banding as a lubricant to facilitate more uniform tension distribution around the item being banded. Grit seals provide more aggressive joint adhesion on waxed banding.

17.3.2 High-Strength Regular-Duty Banding

Approved high-strength, regular-duty steel banding may be used as a substitute package band in place of high tensile banding of equal or lesser size. By design, high-strength, regular-duty banding has a higher breaking strength than the equivalent size high tensile band but has an elongation factor of less than 6%. (See Table 17.9 for approved banding.)

17.3.3 Unit Strap Lifting Method [USLM] Steel Banding)

17.3.3.1 Table 17.2 lists mandatory characteristics and requirements, including minimum seal and joint applications, for high-carbon heat-treated steel banding referred to as USLM (Unit Strap Lifting Method).

Table 17.2 USLM (formerly IRS) high carbon heat-treated steel banding

Width and Thickness (in.)	Width and Thickness (mm)	Minimum Breaking Strength (lb)	Minimum 90% Joint Strength (lb)	Applicable Crimp-Type Seals[a/]	Minimum No. Pairs of Crimps on Joint by Surface Finish		Number of Circles Indicates Width and Thickness
					Not Waxed	Waxed	
1 1/4 × .031	31.75 × .79	5600	5040	CE, CF, CG	4	4	O
1 1/4 × .044	31.75 × 1.12	8500	7650	CF, CG	4	4	OO
1 1/4 × .050	31.75 × 1.27	9700	8730	CF, CG, CH, CJ	6	6	OOO
1 1/4 × .057	31.75 × 1.45	11000	9900	CF, CG, CH, CJ	6	6	OOO “M”

[a/] Refer to Table 17.3 for seal designation.

17.3.3.2 Under these rules, approved USLM banding may be used as a substitute for equal-sized high tensile banding in the securement of commodities on open top railcars. See Table 17.10 for approved USLM banding. (Note: neither the AAR nor these rules endorse or advocate the use of steel banding for lifting purposes.)

17.3.4 For all steel banding, except USLM, minimum joint strength must be at least 75% of the band’s rated minimum breaking strength (MBS). Minimum joint strength for USLM banding must be at least 90% of its MBS.

17.3.5 Elongation of steel banding must fall within the acceptable range for its type and size according to the applicable ASTM specification.

IMPLEMENTED 01/2016

IMPLEMENTED 01/2016

17.4 Seal Standards

17.4.1 For the purpose of these rules, a seal joint is considered a band joint that uses a band seal—a metal clip or sleeve, separate and in addition to the banding ends being joined. See Rule 17.6 for sealless-joint applications.

17.4.2 Table 17.3 lists minimum specifications for gauge and steel hardness for both notch- and crimp-type seals. Effective October 1, 2008, these specifications will be required standards. Each seal specification is given a corresponding two-letter identification to match with appropriate band sizes and joint types in Tables 17.1 and 17.2.

Table 17.3 Seal specifications and identification

Notch-Type Seals			Crimp-Type Seals		
Seal Letter Designation N=Notch Type[a/]	Seal Gauge (Thickness) Tolerance ±0.002 (in.)	Rockwell Hardness Range Requirements for Seals[b/] (Rockwell B/C scale)	Seal Letter Designation C=Crimp Type[a/]	Seal Gauge (Thickness) Tolerance ±.0.002 (in.)	Rockwell Hardness Range Requirements for Seals[b/] (Rockwell B/C scale)
NA	0.020	RB 84—RC 26	CA	N/A	N/A
NB	0.021	RB 60—RC 26	CB	N/A	N/A
NC	0.025	RB 60—RC 26	CC	N/A	N/A
ND	0.031	RB 84—RC 35	CD	0.031	RB 70—RC 26
NE	0.032	RB 84—RC 26	CE	0.032	RB 70–85
NF	0.035	RB 84—RC 26	CF	0.035	RB 70—RC 26
NG	0.036	RB 60—RC 26	CG	N/A	N/A
NH	0.042	RB 60—RC 26	CH	0.042	RB 70—RC 26
NH-1	0.043	RB—60–75	CJ	0.044	RB 60–85
NJ	0.044	RB 55—RC 26	CK	0.045	RB 70–85
NK	0.050	RB 50—RC 26	CL	0.050	RB 50–65
NL	0.053	RB 50—85	CM	0.053	RB 50–85
NM	0.054	RB 84—RC 26	CN	N/A	N/A

[a/]See Table 17.1 for allowable application
[b/]Per ASTM E18-03

17.4.3 Seals meeting the requirements of Table 17.3 do not require separate AAR approval.

17.4.4 Effective October 1, 2008, band seal manufacturers and suppliers are to mark any carton, package, or receptacle containing band seals intended for use in open top loading. The marking shall accurately represent the seals contained inside and shall consist of the appropriate two-letter designation as shown in Table 17.3 for the respective seal type followed by the letters "AAR." Following is an example of the required marking. The letter "X" represents the applicable seal gauge and hardness designation letter from Table 17.3.

Marking example for notch-type seals: **NX-AAR**
Marking example for crimp-type seals: **CX-AAR**

17.4.5 To ensure appropriate application in the field, any container or receptacle into which the seals are transferred shall be immediately marked using the same two-letter seal designation as provided on the original carton. The chain of identification marking must be maintained at all times.

17.5 Seal Joint Application, Quality, and Inspection

17.5.1 Table 17.1 lists the minimum number of notch or crimp pairs that are to be used based on accepted seal-joint technology. However, a minimum of two pairs of crimps are acceptable on bands forming a loop joint at the point of anchorage as shown in Fig. 17.1. (For the purpose of this rule, *pair* refers to one set of opposing deformations made simultaneously, one on each side of the seal.)

17.5.2 Effective October 1, 2008, notch-type joints may be used only for packaging, unitizing, interlacing, layer, or encircling band applications and may not be used to secure loads to the car or on bands encircling the entire load of a floating load design. Unless otherwise specified, applicable crimp-type joints may be used for all seal-joint banding applications for open top loading.

17.5.3 Metal seal joints are made by mechanically making deformations in the seal and parent banding within the seal. The two types of deformations, referred to as *notch* or *crimp*, may not be mixed in the same joint or band being applied. The deformations are always to be applied in a pair simultaneously to each side of the seal.

17.5.4 Notch or crimp pairs may not be closer than 3/4 in. on the same seal or closer than 1/4 in. to the end of the seal. Adequate spacing between the pairs and the end of the seal is essential to a strong joint. In all cases, the number of notch or crimp pairs used on a single seal shall be limited based on seal length in accordance with Table 17.4.

Table 17.4 Notch and crimp limits by seal length

Seal Length	Maximum Notch or Crimp Pairs
3 in. or less	2
Over 3 in. to 4 in.	3
Over 4 in. to 5 in.	4
Over 5 in.	5

17.5.5 Fig. 17.2 illustrates appropriate spacing of deformations in seal joints based on the length of the applied seals. Also illustrated is the use of multiple seals to obtain a sufficient number of crimp- or notch-type pairs for the desired joint strength. When using multiple seals for a common joint, seals shall abut one another to the extent practicable, but no more than 1/4 in. of separation is permitted between any two adjoining seals.

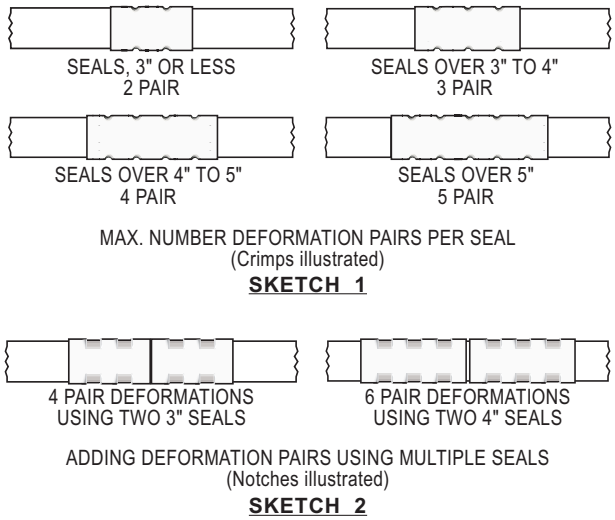

Fig. 17.2 Spacing of notch- and crimp-type pairs

17.5.6 Properly formed seal joints are essential in achieving maximum band-holding strength and efficiency. Whether crimp- or notch-type joints are used, the appropriate type of seals and number of crimp or notch pairs must be applied.

17.5.7 Fig. 17.3 illustrates a properly formed crimp-type joint. An adequate amount of deformation to the seal from the horizontal plane must be achieved uniformly as shown. In addition to the seal, the crimp must deform overlapping sections of the parent banding within the seal to be effective.

A properly formed crimp joint has evenly spaced and formed crimps, with deep offset in both the seal and the parent banding.

Fig. 17.3 Crimped-type seal joint

IMPLEMENTED 01/2016

17.5.8 Fig. 17.4 depicts a properly formed notch-type joint. It is critical that both pieces of the overlapping metal-band ends are clearly visible as being cut away in the notch as shown.

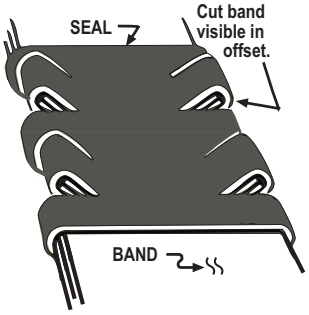

A properly formed notch joint has evenly spaced and deep cuts through both the seal and the parent banding. Cut band edges should be visible within the elevated notches.

Fig. 17.4 Notch-type seal joint

17.5.9 At the time of application, a band joint, regardless of type, that is not properly applied or whose joint deformations are not at the correct depth or properly formed must be removed and replaced with a new band and joint per Rule 17.2.13. The cause of the improper joint must be determined and corrected. If the joint-making equipment is found to be the cause, it must not be used until repaired or replaced.

17.6 Sealless Joints

17.6.1 Sealless band joints are those joints that do not require the use of separate metal seals. Submission for approval consideration of a sealless joint must be made in accordance with Rule 43.2.

17.6.2 Fig. 17.5 illustrates a sealless package band joint when made with approved sealing equipment for 1/2-, 5/8-, 3/4-, and 1 1/4-in. band sizes. Refer to Table 17.5 for a list of approved sealing equipment of this type.

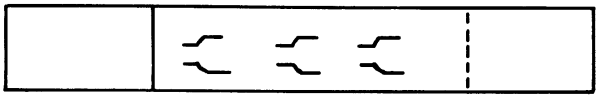

Fig. 17.5 Triple die-cut sealless joint

Table 17.5 Approved steel strapping sealless tool manufacturers (triple die-cut sealless joint)

Manufacturer	Approved Band Sizes (in.)			
	1/2	5/8	3/4.	1 1/4
Acme Packaging Corp. Model G9G	X	X	X	
Fromm	X	X	X	
Fromm A-26				X
Josef Kihlberg Model 1219	X	X	X	
Orgapack (Borbe Wanner)	X	X	X	X
Samuel G9G Series	X	X	X	X
Titan/A.J. Gerrard				X
Titan/Samuel	X	X	X	
Signode Packaging Sys.	X	X	X	

IMPLEMENTED 01/2016

17.6.3 Fig. 17.6 illustrates two different sealless joint patterns with a fourth die cut in reverse for 1 1/4-in. package bands when made with approved sealing equipment. Refer to Table 17.6 for a list of approved sealing equipment of this type.

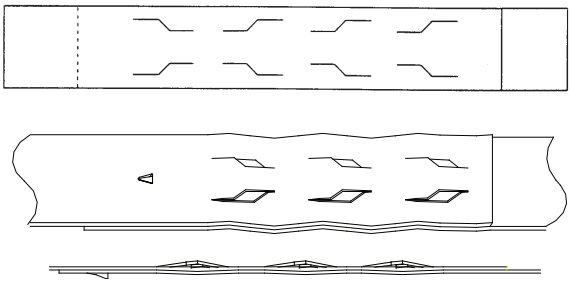

Fig. 17.6 Sealless joint with reverse die-cut

Table 17.6 Approved sealless tool for 1 1/4-in. steel strapping bands (sealless joint with reverse die-cut)

Orgapack (Borbe Wanner)
Signode Packaging Sys. Model SPC-114
ZR Tool Combination Tool Model ZL90-1
Sund Birsta AB—Model # SBH5

17.6.4 Arc-Welded Band Joints

17.6.4.1 Fig. 17.7 illustrates a sealless joint made with an approved computer-controlled tension and arc-weld sealing system for package banding. Refer to Table 17.7 for a list of approved sealing equipment of this type.

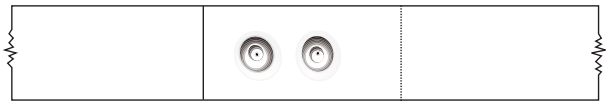

Fig. 17.7 Arc weld sealless joint

Table 17.7 Approved weld steel band sealless joint system

Manufacturer	Model No.	Sealing Process	Approved Band Size
Titan—Umreifungstechnik	Titan VS 32	TIG (tungsten inert gas) spot-weld system	1 1/4 × .029 in. 1 1/4 × .031 in. 1 1/4 × .035 in. 1 1/4 × .044 in.
ITW Signode	Signode M410-114AW	Resistance spot-weld system	1 1/4 × .029 in.
SMS Logistiksysteme GmbH	VSS 32/ VSK32	Double spot resistance weld system	1 1/4 × .031 in.
Sund Birsta AB	Model # SBHW	TIG (tungsten inert gas) double spot-weld system	1 1/4 × .031 in.
Note: The above devices are approved for the application of package bands only.			

17.6.4.2 Arc weld joint-making equipment must be used in strict compliance with the manufacturer's instructions, precautions, and recommendations, including prescribed regular periodic maintenance, in order to ensure safe and acceptable joints.

17.6.4.3 Not all band coatings are compatible with the arc weld joint process. Users must verify with the device manufacturer or designated representative that bands with specific coatings are acceptable for use. Zinc-coated bands must not be used with the arc welding process.

IMPLEMENTED 01/2016

IMPLEMENTED 01/2016

17.7 Joint Performance and Tool Maintenance

17.7.1 Companies/users that utilize tensioning and joint-making equipment, including sealed- and sealless- type joints, are responsible for making certain that employees engaged in the use of such equipment are trained and properly instructed in the correct use of these tools. Improper use of such equipment can result in improper band tension (too high or too low) and/or deficient joint strength. Users are to refer to the equipment manufacturer's recommendations for proper use, care, and maintenance of this equipment to ensure optimum performance and joint efficiency.

17.7.2 It is the responsibility of the user(s) to ensure that the tools being used for tensioning and sealing are compatible with the type of banding and seals being applied and are in good working condition and capable of producing a properly formed joint.

17.7.3 Normal use of band tensioning and sealing equipment results in wear to such equipment, necessitating periodic maintenance and repair. Joint crimps and/or notches are to be inspected frequently during application to ensure that joints are being properly formed. Refer to Rule 17.5 for illustrations on proper joint application.

17.8 Tool- and Joint-Condition Inspection and Testing

17.8.1 The compatibility and condition of the materials and joint-making tools and equipment for load securement bands must be verified by the user during initial application of the banding.

17.8.2 To ensure consistently strong and reliable securement-band joints, users must perform required visual inspections and periodically submit band joint samples to laboratory testing as described herein.

17.8.3 For the purpose of this rule, the term *securement band* refers to the following:

17.8.3.1 Any size band listed under the heading "Securement Bands" in Table 17.1.

17.8.3.2 Where a figure calls for a band size listed under the heading "Package Bands" in Table 17.1 and is used to secure a load to the railcar.

17.8.3.3 When band sizes listed under the heading "Package Bands" in Table 17.1 provide the only active securement instrument of the commodity and other securement implements are not used, such as cable, wire rope, chain, or securement banding or strapping.

17.8.4 For identification and tracking purposes, each joint-making tool or apparatus is to be stamped, tagged, or otherwise permanently marked with a distinctive and legible identification mark or number.

17.8.5 At the beginning of every shift or comparable use period, a visual inspection shall be made of each joint-making apparatus and the first seal joints made with the inspected apparatus. The inspection shall determine that there are no apparent defects in the joint-making process or apparatus and that its components are in good working condition and maintained for optimum performance and endurance. Joints shall be inspected for proper band and seal orientation and application and to ensure that the deformations (crimps or notches) are properly oriented, spaced, shaped, and made to acceptable depths according to the equipment and product manufacturers' specifications. If defects are found, the tool is to be removed from service until repaired.

17.8.6 Tensile testing is required any time such equipment undergoes repair or replacement of any component or portion of the apparatus directly affecting its joint-making capability. Acceptable results from such testing will suffice as annual testing verification provided documentation is maintained as required in Rule 17.8.9.

17.8.7 Testing is to be performed in accordance with Rule 43.2, except as noted here regarding the number of test samples and test record handling.

17.8.8 Testing shall be performed by either the band or tool manufacturer, the AAR, or other certified testing facility. The latter may include a user's own test equipment, provided all required test functions can be achieved and evidence of industry-recognized certification of the test equipment can be readily produced upon request.

17.8.9 A minimum of three band-joint samples made with each tool used in the application of steel bands must be subjected to testing. If a tool is used to make more than one type or size of joint, each type and size must be tested accordingly.

17.8.10 All band-joint samples must be made using AAR-approved banding. Each sample is to be at least 18 in. long with the joint centered between the ends of the sample. Each sample must be legibly marked with the identification of the equipment with which the joint was actually made. This information is to be verified and documented in the record of testing by the tester and attested to by the tester signing the test report.

17.8.11 Users must maintain documentation of all test results for the most recent 24-month period. Current test records of each individually identified tool are to be maintained and made available for inspection upon request.

17.9 Identification and Marking

17.9.1 All approved steel banding must be marked with the letters “AAR” followed by the AAR-assigned identification mark.

17.9.2 Only that banding that has been specifically granted approval by the AAR may be marked with the AAR identification number.

17.9.3 Markings shall be clearly legible with characters not less than 1/8 in. high for steel die imprint and not less than 1/4 in. high for paint, ink surface printing, or embossing. Markings are to be spaced at not more than 5-ft intervals.

17.9.4 After being approved and assigned an identification number or mark, the approved company may apply this mark only to banding meeting the following conditions: 1) Banding must be produced by and/or under the control of the approved manufacturer; 2) It must meet ASTM specification D3953 (latest edition); and 3) It must be of an approved size and consistent with the listings in Tables 17.2, 17.8, 17.9, and 17.10.

17.9.5 Markings applied to steel bands manufactured to metric dimensions must be followed by the letter “M” of the same size as the original marking.

17.9.6 The method used to mark bands is to be reported to the Manager, AAR Loading Rules, and will be listed in Table 17.8.

17.9.7 The Committee, at its discretion, shall have the authority to require retesting of any AAR-approved banding if and when it is considered necessary.

17.9.8 Table 17.8 lists manufacturers and suppliers whose banding has been tested and approved. The table also lists each manufacturer’s marking method and assigned AAR identification number.

Table 17.8 Approved steel band manufacturers/suppliers and assigned AAR ID

(For the latest update to this table, go to the TTCI Web site at http://www.aar.com/otlr.htm)

AAR ID[a/]	Marking Method[b/]	Company	Approved Through[c/]	Securement Bands Band Width (in.)									Package Bands Band Width (in.)															
				2			1 1/4						1 1/4		3/4										5/8		1/2	
				.065	.050	.044	.065	.050	.044	.035	.031	.029	.025	.020	.050	.044	.035	.031	.029	.028	.025	.023	.022	.020	.023	.020	.023	.020
11	E	ITW/Acme Packaging	6/15			X			X	X	X	X	X					X	X				X	X	X	X	X	X
11	E	ITW/Signode (Mexico)	6/15						X	X	X							X										
11	E	ITW/Signode	6/15			X			X	X	X	X	X					X	X			X		X	X	X	X	X
22, 33, 47	D, I	Samuel Strapping Systems	8/14		X	X		X	X	X	X	X	X	X	X	X	X	X	X	X	X	X	X	X	X	X	X	X
52	I	Gerrard-Ovalstrapping	1/14								X	X	X					X	X		X	X		X	X	X		
20	D, I, P	Garibaldi (Chile)[d/]	1/14						X		X							X			X	X						
20	D, I, P	Garibaldi (Chile)[d/]	8/12									X												X		X		
26	I	Hankum Co., Ltd.	5/12									X									X					X		
26	I	Hankum Co., Ltd.	2/15								X																	
57	I	Maillis Strapping Systems-USA Inc.	12/15						X	X	X	X										X				X		
58	I	DuBose Strapping Inc.	11/14			X			X	X	X	X	X	X				X	X		X	X		X	X	X	X	X
56	D	LS Strapping, Inc.	8/14								X																	
48	D	Independent Metal Strap Co.	4/15							X																		

[a/] All AAR identification numbers or marks are to be preceded with the letters “AAR.”
[b/] Legend of marking methods: D = steel die imprint; E = steel embossed; I = ink print; P = paint embossed
[c/] Month and year, 3-year approval per Rule 3, expires at the end of the date shown unless approval is renewed.
[d/] Garibaldi (Chile)—1 1/4 in. and 3/4 in. steel die imprint and ink print marking, 5/8 in. paint embossed only.

17.9.9 Table 17.9 lists approved high-strength, regular-duty banding acceptable for use as a substitute package band in place of heavy-duty banding.

IMPLEMENTED 01/2016

Table 17.9 High-strength Type I regular-duty package bands

(For the latest update to this table, go to the TTCI Web site at http://www.aar.com/otlr.htm)

Company	Strap Name	Size (in.)
Samuel Strapping Systems	Ultra Ten	1/2 × .020
Samuel Strapping Systems	Ultra Ten	1/2 × .023
Samuel Strapping Systems	Ultra Ten	5/8 × .020
Samuel Strapping Systems	Ultra Ten	5/8 × .023
Signode Packaging Systems	Apex Plus	1/2 × .020
Signode Packaging Systems	Apex Plus	5/8 × .020
Signode Packaging Systems	Apex Plus	3/4 × .020
Signode Packaging Systems	Apex Plus	3/4 × .023

IMPLEMENTED 01/2016

17.9.10 When using banding listed in Table 17.9, follow the same requirements for joint strength and seal application listed under the equivalent size banding in Table 17.1.

17.9.11 Table 17.10 lists approved manufacturers of USLM banding and their identification markings. For USLM minimum break strength, refer to Appendix D, Table D.14.

Table 17.10 Approved IRS/USLM banding manufacturers

(For the latest update to this table, go to the TTCI Web site at http://www.aar.com/otlr.htm)

Name	Method of Marking	Color	Marking	Sizes Approved
Acme Packaging Corp.	Ink imprint	Yellow	Ⓐ	All
Signode Packaging Systems	Ink imprint	White	Ⓢ	All
Garibaldi Metals	Ink imprint	Yellow	Ⓖ	1 1/4 × .057
Garibaldi Metals	Ink imprint	Yellow	Ⓖ	1 1/4 × .050

17.9.12 Assigned manufacturer's markings shall consist of a circle approximately 3/4 in. in diameter that shall contain the manufacturer's symbol. Markings must be repeated at not more than 24-in. intervals.

17.10 Non-Cushioned Band Anchors, Standard and Improved

17.10.1 Standard and improved non-cushioned band anchor devices (NCBA) facilitate band-to-car attachment. Anchor devices in this category are generally metal-to-metal connectors. Such devices provide limited or no energy-absorption characteristics

17.10.2 Standard NCBAs must have a band seat with a radius of at least 3/8 in. or a diameter of 3/4 in. or greater. Standard NCBAs may be fixed or articulating. (Refer to AAR *Manual of Standards and Recommended Practices*, Section C, Standard S-230 for standard anchor specifications.)

17.10.3 An improved band anchor device (INCBA) shall have a band seat with a radius of 1 in. or greater or a diameter 2 in. or greater. Such devices shall be articulated to allow the band seat portion to move independently of the fixture base so the seat remains perpendicular to an appropriately-applied band regardless of the band's orientation.

17.10.4 Table 17.11 lists improved non-cushioned band anchor devices having met the required criteria and received AAR approval.

Table 17.11 Improved non-cushioned steel band-anchor devices

(For the latest update to this table, go to the TTCI Web site at http://www.aar.com/otlr.htm)

Manufacturer	Device Model, Drawing, or Part Number	MBS (lb)
Holland/Portec Railway Products	Dwg. 20983440	27,600
Holland/Portec Railway Products	Dwg. 20983430	27,600
IRECO, LLC	P/N 20661	27,600
IRECO, LLC	P/N 20664	27,600

17.10.5 Fig. 17.8 illustrates the approved improved non-cushioned band anchor devices listed in Table 17.11.

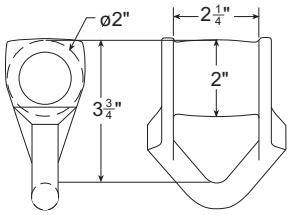

HOLLAND/PORTEC RAILWAY PRODUCTS PART NO. 20983440

FOR USE WITH 2" HIGH TENSILE SECUREMENT BANDS
27,600 LB MINIMUM BREAK STRENGTH

SKETCH 1

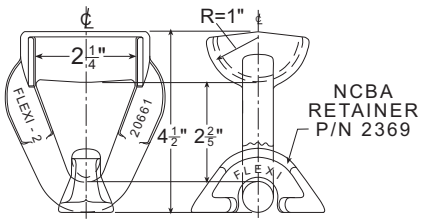

IRECO NCBA P/N 20661 WITH RETAINER NO. 2369

FOR USE WITH 2" HIGH TENSILE SECUREMENT BANDS
27,600 LB MINIMUM BREAK STRENGTH

SKETCH 3

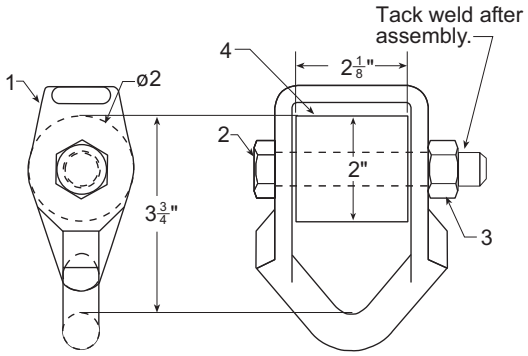

HOLLAND/PORTEC RAILWAY PRODUCTS PART NO. 20983430

FOR USE WITH 2" HIGH TENSILE SECUREMENT BANDS
27,600 LB MINIMUM BREAK STRENGTH

NOTE: Roller may be replaced by removing bolt and nut.

ITEM	PART NO.	DESCRIPTION	QTY
4	10983320	STEEL ROLLER	1
3	10810340	5/8-11NC HEX LOCK NUT PLAIN FINISH	1
2	10614460	5/8-11NC HEX BOLT, 4 LONG GRADE 8 ZINC PLATED	1
1	20983420	BANDING ANCHOR CASTING	1

SKETCH 2

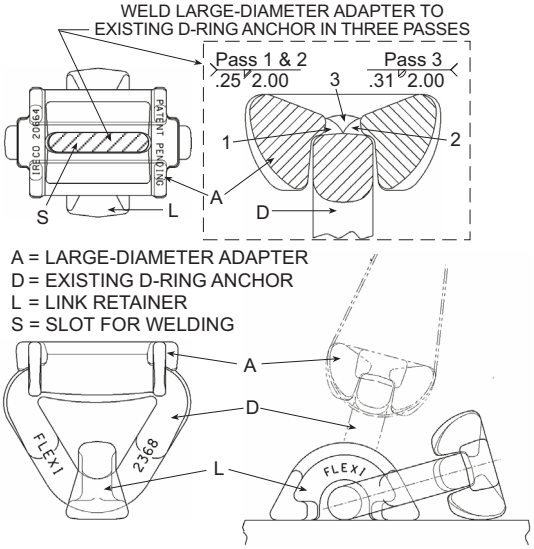

IRECO PART NO. 20664

LARGE-DIAMETER ADAPTER & CONVERSION WITH
EXISTING IRECO FLEXI 2368 D-RING ANCHOR

FOR USE WITH 2" HIGH TENSILE SECUREMENT BANDS
27,600 LB MINIMUM BREAK STRENGTH

SKETCH 4

Fig. 17.8 Improved non-cusioned band anchor devices

IMPLEMENTED 01/2016

IMPLEMENTED 01/2016

17.11 Cushioned Band Anchors (CBAs)

17.11.1 Anchor devices in this category facilitate band- to-car attachment while utilizing design characteristics intended to dampen or isolate dynamic forces and/or vibration between the car and the banding. Approved devices listed in this category are required in certain loading figures. (Note: In figures not requiring the use of these devices, as well as General Rule loads, the application of cushioned band anchors may or may not be detrimental to the load design given the inherent travel or elongation incorporated in the device design.)

17.11.2 Vibration Isolation Devices (VIDs)

17.11.2.1 Vibration isolation devices (VIDs) are a subcategory of CBAs and are designed to break the metal-to-metal connection between the securement bands and the railcar. Using integrated nonmetallic components, a VID isolates railcar vibration from the band, where, under certain conditions, such vibration can lead to fatigue cracking in the banding. Compared to CTDs, VID units typically have minimal elongation or travel and are not intended as shock mitigators.

17.11.2.2 VID unit designs must be submitted to the AAR for approval consideration. Based on the design and intended application, the Committee may require laboratory and/or field testing to validate the device's performance.

17.11.2.3 Table 17.12 lists vibration isolation devices that have been approved for use for load securement when specified in a figure.

Table 17.12 Approved vibration isolation band-anchor devices

(For the latest update to this table, go to the TTCI Web site at http://www.aar.com/otlr.htm)

Manufacturer	Device Model, Drawing, or Part Number	MBS (lb)
Holland/Portec Railway Products	Drawing 20983480	27,600
Holland/Portec Railway Products	Drawing 20983490	27,600

17.11.2.4 Fig. 17.9 illustrates the approved vibration isolation band anchor devices listed in Table 17.12.

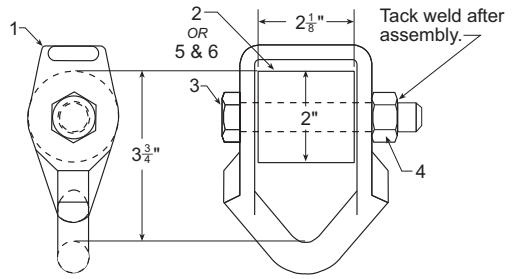

HOLLAND/PORTEC RAILWAY PRODUCTS CUSHIONED BAND ANCHOR (CBA)

FOR USE WITH 2" HIGH TENSILE SECUREMENT BANDS
27,600 LB MINIMUM BREAK STRENGTH

PART NO. 20983480
CBA WITH COMPOSITE ROLLER CONSISTS OF ITEMS 1, 3, 4, 5, & 6

PART NO. 20983490
CBA WITH ELASTOMERIC ROLLER ICONSISTS OF ITEMS 1, 2, 3, & 4

NOTE: Rollers may be replaced by removing bolt and nut.

ITEM	PART NO.	DESCRIPTION	QTY
6	10983310	POLYURETHANE CYLINDER	1
5	10983320	TUBING	1
4	10810340	5/8-11NC HEX LOCK NUT PLAIN FINISH	1
3	10614460	5/8-11NC HEX BOLT, 4 LONG GRADE 8 ZINC PLATED	1
2	10983210	ELASTOMERIC CYLINDER	1
1	20983420	BANDING ANCHOR CASTING	1

SKETCH 1

Fig. 17.9 Approved VIDs

17.11.3 Constant Tensioning Devices (CTDs)

17.11.3.1 Constant tensioning devices (CTDs) are designed with a compression or shock mitigation component with an inherent degree of travel or elongation, normally greater than 5/8 in.

17.11.3.2 Table 17.13 lists constant tensioning devices that have been approved for use with 1 1/4-in. and 2-in. high tensile bands for load securement when specified in a figure.

Table 17.13 Approved constant tensioning devices

(For the latest update to this table, go to the TTCI Web site at http://www.ttci.aar.com/standards/open_top_loading_approvals.php)

Manufacturer	Device Model, Drawing, or Part Number
Azee	CTS with quick release
Mac-Lean Fogg	With/without QR
Holland/Portec Railway Products	With/without QR
Spring Design	With/without QR

17.11.3.3 Fig. 17.10 illustrates the approved CTDs listed in Table 17.13.

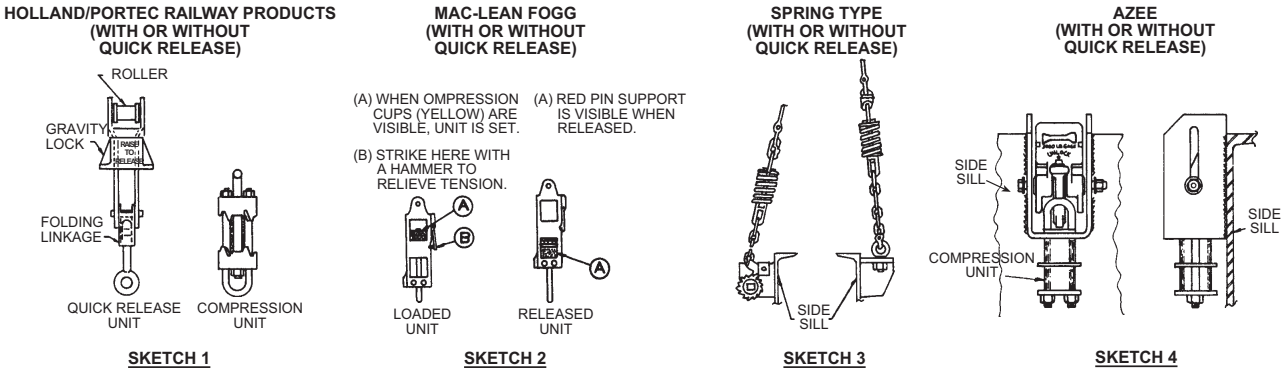

Fig. 17.10 Approved CTDs

17.11.4 Requirements for CTDs

17.11.4.1 The constant tensioning device (CTD) performance must provide prescribed tensioning. It must operate with quick and positive release when so provided. The device must operate satisfactorily under all weather conditions, and component parts must not seize due to rust or deformation. Nonmetallic compression units must be operable to –40 °F and must not be susceptible to deterioration as a result of exposure to sunlight radiation and/or temperatures between –40 °F and 200 °F.

17.11.4.2 The devices must accept bands up to 2 in. × .065 in. or other sizes as specified for the device.

17.11.4.3 The device must have a locking feature that will release only under operator control and not under vibration or shock.

17.11.4.4 The point of band attachment must allow a minimum of 10° angling laterally when applied to the car.

17.11.4.5 The compression unit must be capable of absorbing 3,000 lb of band compression and still have reserve travel for an additional 3,000 lb of compression.

17.11.4.6 Attachment to the car must be such that the device is renewable at a typical shop facility. The attachment must be at least equal to the strength of the device. No portion of the device may exceed the clearance outline in either the locked or unlocked position. The device or its component parts must not be susceptible to dragging when not in use.

17.11.4.7 CTDs must be applied in a manner such that the compression unit is not hindered in developing the minimum tension specified, either by the loaded commodity and/or the car's structural members.

IMPLEMENTED 01/2016

18. PROTECTORS FOR BANDS AND/OR WIRE

18.1 Band and/or wire protectors sufficient to provide a suitable radius must be used to protect bands and wires at stake pockets, slotted holes in car sides, and at all points having sharp edges on either equipment or lading.

18.2 Protectors must be applied so as to prevent their displacement. High tension bands, when used as protectors, must be secured to tie bands by sealing.

18.3 Insofar as possible, the carriers should furnish cars with stake pockets and anchorage holes or slots rounded to the extent that the protectors are not required at such points of attachment. When cars in this condition are not available, the carrier should arrange to either grind off the sharp edges on such anchorage details or weld rounded metal thereon having a radius of at least 3/16 in. before cars are placed for loading. In cases where cars are placed for loading that do not have the sharp edges corrected on such details, the shipper and carrier shall negotiate as to the proper procedure to be followed.

18.4 Unless otherwise specified, only metal edge protectors are to be used under load securement bands and/or unitizing bands on loads of steel product.

18.5 Where a reference is made in specifications of any figure in Section 2 to "protection angles, 20 gauge, 4 in. wide applied so as to prevent displacement," the use of manufactured edge protectors giving equivalent band protection is permissible, except for circumstances described in Rule 18.4.

19. NONMETALLIC STRAPPING

19.1 Scope

19.1.1 This rule governs nonmetallic strapping (excluding synthetic webbing), joining methods, related components, and equipment as applied to the securement of commodities for shipment on open top railcars. For synthetic webbing, refer to General Rule 20.

19.1.2 Nonmetallic strapping must be used with protectors sufficient to provide a suitable radius to protect bands at stake pockets, slotted holes in car sides, and all points having sharp edges on either equipment or lading such as structural steel.

19.1.3 All nonmetallic strapping used in the securement of packages and/or load securement must be AAR approved in accordance with Rule 45.1.

19.1.4 All approved strapping must be marked in accordance with Rule 19.5.

19.1.5 The nonmetallic strapping listed in Tables 19.1, 19.2, 19.3, and 19.4 has been tested and approved in accordance with these rules and ASTM Specification D3950. Tables 19.1, 19.2, and 19.3 are available on the TTCI Web site at http://www.ttci.aar.com/standards/open_top_loading_approvals.php. Table 19.4 is located on page 56.

19.1.6 On General Rules loads, Type 1A nonmetallic strapping, Grades 6, 7, and 8 may not be used to provide the required longitudinal or lateral restraint. Approved Type 1A nonmetallic strapping, Grades 6, 7, and 8 may be used to provide only the vertical load restraint. **Note:** An object must be secured with a minimum of two tie-downs.

19.1.7 The strapping in the tables referenced in Rule 19.1.5 may be used only where specified in an approved figure, or as an allowable substitution for steel banding as indicated in figures in the approved tables.

19.1.8 Strapping must be applied, tensioned, and sealed consistent with AAR rules and approved items and in accordance with the recommendations and requirements of the manufacturer of the strapping and strapping equipment.

19.1.9 Strapping must be applied with AAR markings facing away from the load to which it is applied.

19.1.10 Once tensioned and sealed or partially sealed, Type IV PET nonmetallic strapping may not be reused or resealed.

19.1.11 Type 1A non-metallic strapping may be retensioned as needed, but not reused.

19.1.12 Nonmetallic strapping may not be spliced.

IMPLEMENTED 01/2016

19.2 Joint Application

19.2.1 The use of any joint-making or sealing equipment must be in accordance with the requirements of these rules and the manufacturer or supplier of the equipment, but the responsibility for joint effectiveness remains with the user.

19.2.2 Strapping joints, regardless of joining method used, must result in a joint strength equaling at least 75% of the minimum break strength of the parent strap being joined and shall meet all other requirements of these rules.

19.2.3 Metal Seal Joints

19.2.3.1 Metal seal joints may be used only in an approved-system application. Unless otherwise specified herein, a joint-making system shall include the specific strapping, metal seal(s), and sealing tool equipment that, when used in conjunction with each other, consistently produce sealed joints meeting or exceeding the minimum joint strength required per Rule 19.2.2. Refer to Table 19.4 for approved metal-sealing joint systems.

Table 19.4 Metal-seal systems for Type IV strapping

(For the latest update to this table, go to the TTCI Web site at http://www.ttci.aar.com/standards/open_top_loading_approvals.php)

AAR ID	Manufacturer/ Distributor	Application Size in. (mm)	Metal Seal Model	No. Seals per Joint	Tool Model/Type
59	Cyklop-Brazil	5/8 × .035 (15.9 × 0.89)	H-36/16	2	PS 16 crimper
59	Cyklop-Brazil	5/8 × .040 (15.9 × 1.02)	H-36/16	2	PS 16 crimper
59	Cyklop-Brazil	3/4 × .040 (19.1 × 1.02)	H-36/19	2	PS 19 crimper
21	Plantec	5/8 × .040 (15.9 × 1.02)	SMPET16	2	Transpack H-36
21	Plantec	3/4 × .040 (19.1 × 1.02)	SMPET19	2	Transpack H-36

Note: **Components in the above metal-seal systems may not be substituted or interchanged with any other components not listed as part of that system.**

19.2.3.2 Fig. 19.1 illustrates approved metal seals after application and sealing or deformation of seals. Crimp or stamp patterns significantly different in appearance from the illustration should be checked for tool wear, application technique, and component authenticity.

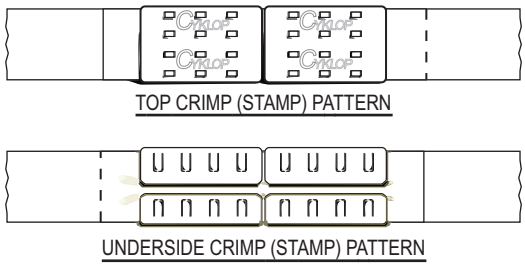

Fig. 19.1 Approved Cyklop metal seal joint and application

19.2.4 Buckle Joints—Type 1A Strap Grades 3, 4, and 5

Strapping listed in Table 19.2 (available on the TTCI Web site at http://www.ttci.aar.com/standards/open_top_loading_approvals.php) must be tensioned with the proper tensioning tool and sealed with the appropriate buckle in accordance with the manufacturer's recommendations. Fig. 19.2 illustrates the proper application of the CB-10 (1 1/4-in.) buckle.

IMPLEMENTED 01/2016

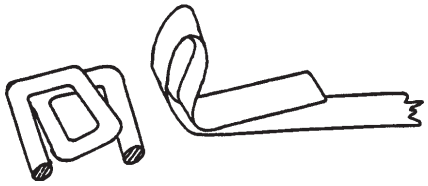

STEP 1

Form a loop in one end of strap. Buckle must be applied with flat surface toward load.

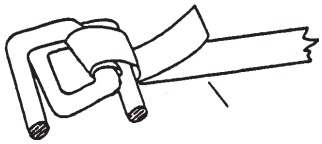

STEP 2

Pass loop through center of buckle. Pass doubled loop over inner bar and slip loop over outer arm.

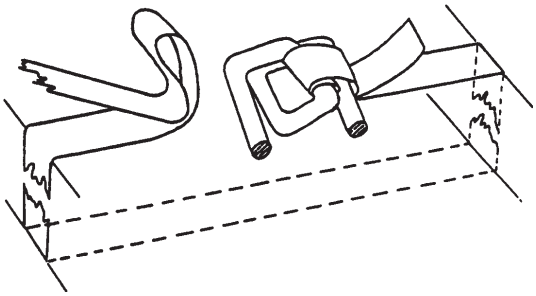

STEP 3

Position strap around lading and attach free end of strap to buckle as shown in STEP 2.

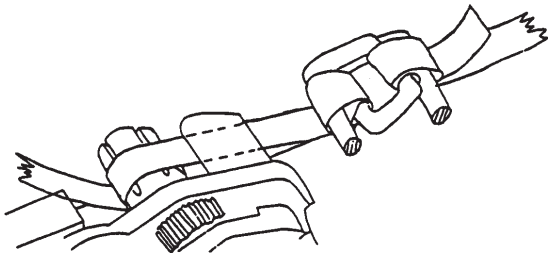

STEP 4

Pull end of strap by hand to remove slack.
Complete tensioning of strap using the proper tensioning tool.

Fig. 19.2 Wire buckle application

IMPLEMENTED 01/2016

19.2.5 Ladder Joints—Type 1A Strap Grades 6, 7, and 8

Strapping listed in Table 19.3 (available on the TTCI Web site at http://www.ttci.aar.com/standards/open_top_loading_approvals.php) must be tensioned with the proper tensioning tool and sealed with the appropriate buckle in accordance with the manufacturer's recommendations. Fig. 19.3 illustrates the proper application of the HDB12N or DBL-12N (1 5/8 in.) buckle.

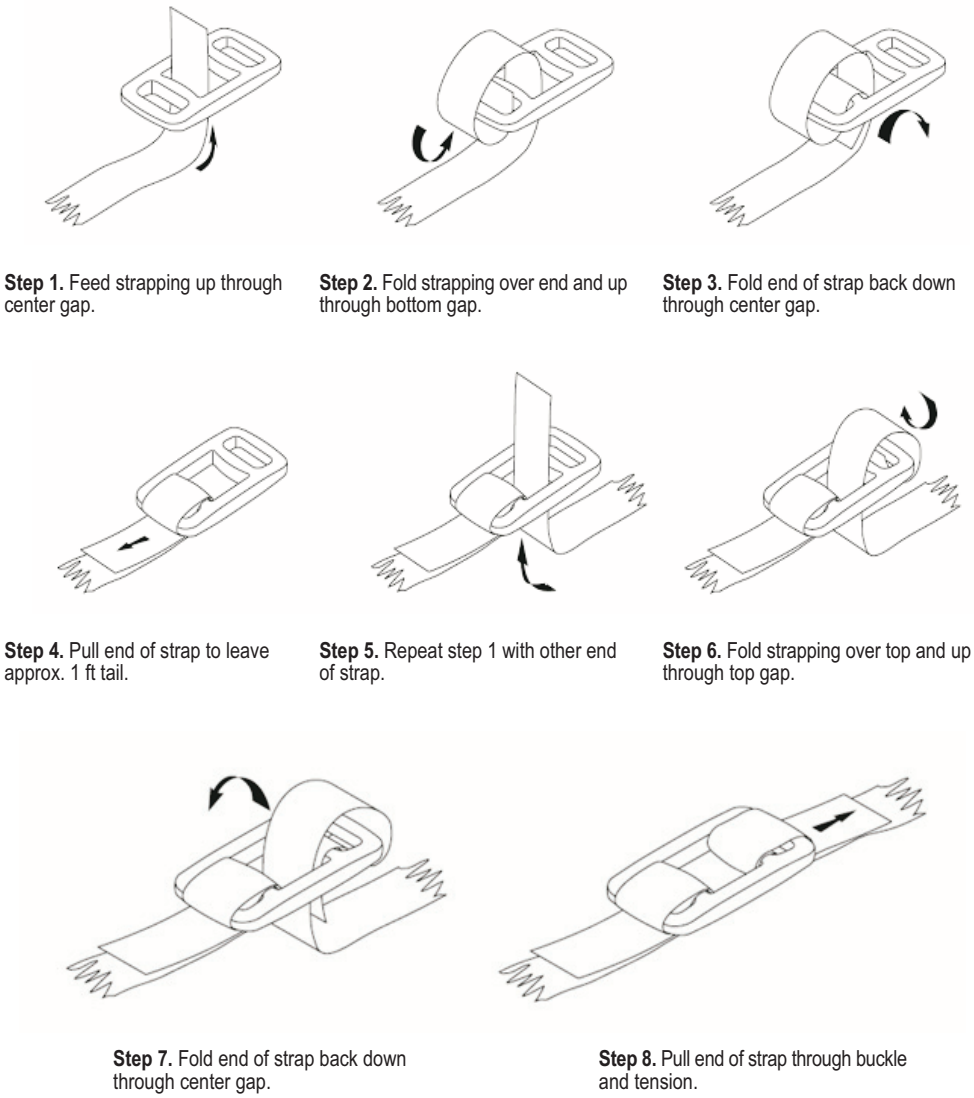

Fig. 19.3 Ladder buckle application

19.3 Nonmetallic Strapping Approval and Testing Procedures

See Appendix C.

19.4 Vacant

IMPLEMENTED 01/2016

IMPLEMENTED 01/2016

19.5 Identification and Marking

19.5.1 All approved nonmetallic strapping must be marked with the letters "AAR" followed by the AAR-assigned identification mark.

19.5.2 Only strapping that has been specifically granted approval by the AAR may be marked with the AAR identification number.

19.5.3 Identification markings must be applied indelibly with clearly legible characters not less than 1/4 in. high. Markings are to be repeated at not more than 5-ft intervals.

19.5.4 After being approved and assigned an identification number or mark, the approved company may apply this mark only to strapping meeting the following conditions:

19.5.4.1 Strapping must be produced by and/or under the direct control of the approved manufacturer.

19.5.4.2 Strapping must meet ASTM specification D3950 (latest edition) and other requirements listed herein.

19.5.4.3 Strapping must be of an approved size and consistent with the listings in Tables 19.1, 19.2, and 19.3 (available on the TTCI Web site at http://www.ttci.aar.com/standards/open_top_loading_approvals.php).

19.5.4.4 Strapping shall meet the minimum requirements shown in Table 19.5.

Table 19.5 Breaking strength of Type IV polyester (PET) strapping

Nominal Width		Nominal Thickness		Minimum Break Strength (lb)[a/]	Minimum Joint Strength (lb)
in.	(mm)	in.	(mm)		
5/8	(15.9)	.035	(0.89)	1300	975
5/8	(15.9)	.040	(1.02)	1500	1125
3/4	(19.1)	.040	(1.02)	1750	1313
3/4	(19.1)	.050	(1.27)	2250	1688
3/4	(19.1)	.055	(1.40)	2400	1800
3/4	(19.1)	.060	(1.53)	2500	1875
1	(25.4)	.040	(1.02)	2300	1725
1	(25.4)	.050	(1.27)	2800	2100
1 1/4	(32.0)	.032	(0.82)	2250	1688
1 1/4	(32.0)	.040	(1.02)	2800	2100

[a/] Allowable range of elongation at break is from 5% to 20%. Ultimate Elongation Range: 5% to 20% (Standard Elongation PET)

19.5.5 Markings applied to strapping manufactured to metric dimensions must be followed by the letter "M" of the same size as required in Rule 19.5.3.

19.5.6 The Committee shall have the authority to require retesting of any AAR-approved strapping if and when, at its discretion, it is considered necessary.

THIS PAGE LEFT BLANK INTENTIONALLY

IMPLEMENTED 01/2016

IMPLEMENTED 01/2016

THIS PAGE LEFT BLANK INTENTIONALLY

20. SYNTHETIC WEBBING AND ASSEMBLIES

20.1 Scope and Definitions

In this rule, synthetic webbing refers to a narrow fabric woven of high-tenacity yarns of synthetic fibers offering suitable characteristics for use in cargo securement. The information following this paragraph is provided to better familiarize the user with the characteristics of synthetic webbing for tie-downs.

20.1.1 *Coating*. A finish applied to the webbing to resist liquids, abrasion, environmental deterioration, etc.

20.1.2 *Elongation*. The measurement of webbing stretch, expressed as a percentage of the original unloaded webbing length at a given applied load.

20.1.3 *Nylon webbing*. (Not approved for use as securement for open top loading.) Often used in securing cargo on highway trucks and trailers. This webbing has a higher elongation than polyester of the same construction and strength. Nylon has higher natural abrasion resistance properties than polyester, although some over-coatings allow approximately equal abrasion performance of both types.

20.1.4 *Polyester webbing*. Typically used in systems where low elongation and low creep are desirable. Polyester's higher density allows thinner webbings than nylon at equal strengths. Polyester has better natural resistance to moisture than nylon, although some coatings allow approximately equal performance of both types.

20.1.5 *Selvage*. A manufacturer's term referring to the woven or knitted edge of webbing to prevent raveling.

20.1.6 *Web width*. The distance across the webbing body from each selvage or edge.

20.1.7 *Minimum Breaking Strength* (MBS). The minimum tensile load (in pounds) at which the webbing fails.

20.1.8 *Design (safety) factor*. A term denoting the webbing's theoretical reserve capability. This is computed by dividing the minimum breaking strength (MBS) by the working load limit (WLL), often expressed as a ratio, e.g., 3:1, or 3 to 1, etc.

20.1.9 *Working load limit (WLL)*. The stated capacity of a web strap, specified as a fraction or ratio of the minimum breaking strength (MBS). Example: If the MBS is three times the WLL (or the WLL is one-third of the MBS value), then the design (safety) factor is said to be a ratio of 3:1 or

MBS to WLL = 15,000 lb to 5,000 lb = 3 to 1

20.1.10 *Assembly or system*. Any items making up the tie-down assembly between each ultimate point of attachment, including all components such as webbing, winches, hooks, links, rings, swivels, shackles, turnbuckles, ratchets, binders, compression units, etc., as well as the method of securing anchorage devices to the railcar. When a working load limit is specified in a figure, all components of the assembly must meet the minimum requirements. It should be noted that the actual WLL of a tie-down assembly is likely to be less when individual components of comparable rating are combined in a system.

20.2 Polyester Webbing

20.2.1 Woven polyester webbing may be used for open top loading when permitted in a specific figure.

20.2.2 The use of polyester webbing, is permitted as load securement on a General Rule load, but its application is subject to the limitations detailed in Rule 20.5.

20.2.3 Polyester webbing used in the securement of cargo on open top cars, trailers, or containers must have a minimum design (safety) factor of 3:1.

20.2.4 When designing a load restraint system, the MBS of the assembly, including the webbing, must be used to calculate the number of straps to be used.

20.2.5 When renewing the webbing in an existing restraint system, the minimum breaking strength of the system must be maintained.

20.2.6 Nylon or any material other than the material specified herein for web strapping is not approved for use as securement for open top loading.

20.2.7 Where a loading figure calls for polyester webbing and specifies a certain type of coating such as PVC, no deviations or substitutions are permitted.

20.2.8 If no coating is specified, webbing with protective coatings may be used, provided all other specified requirements are adhered to.

20.2.9 The use of nylon sleeves and/or corner protectors is permissible when used with polyester webbing, unless otherwise specified in a figure.

IMPLEMENTED 01/2016

IMPLEMENTED 01/2016

20.3 Winches and Other Components

20.3.1 Unless otherwise specified, all web assembly components, including ratchets, winches, hooks, eyes, connecting chain, etc., must be at least equal in minimum breaking strength to the component webbing.

20.3.2 A winch bar such as the one shown in Fig. 20.1, made of steel or other suitable alloy and specifically designed for use with web winches of the type illustrated in Fig. 20.2, is to be used for tensioning web strapping. A typical winch bar, as shown, is to be 30 to 40 in. long. Devices such as "cheater bars," pipe extensions, etc., must not be used when tensioning web strapping. Tensioning must be performed in accordance with the winch and winch bar manufacturer's instructions and safety guidelines.

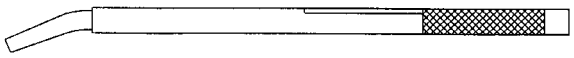

Fig. 20.1 Winch bar

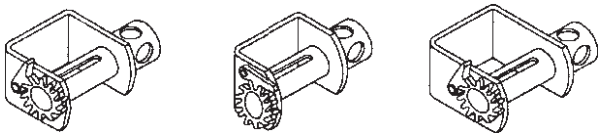

Fig. 20.2 Fixed winch styles

20.3.3 The illustrations in Fig. 20.2 depict three types of permanent-mounted winches. When applied to railcars or trailers, winches must be installed with the car or trailer owner's permission and the attachment must be performed in accordance with Rule 14.13 and the winch manufacturer's recommendations. Installation of winches or other tie-down apparatus must not alter the clearance profile of the car without the car owner's written permission.

20.3.4 Fig. 20.3 illustrates a typical portable web assembly with ratchet buckle and end hook.

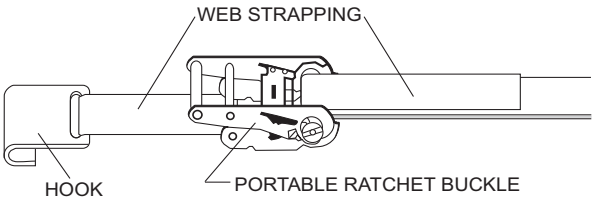

Fig. 20.3 Portable web ratchet assembly

20.3.5 Fig. 20.4 illustrates one type of edge protection that may be made of rubber, plastic, vinyl, metal, or other materials that are highly resistant to abrasion. Slip-on sleeve protectors made of nylon, polyester, and other materials may be effective as well.

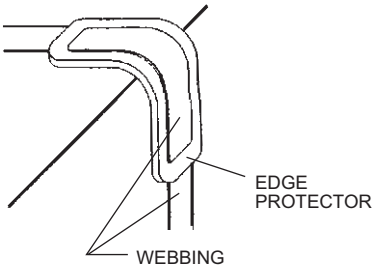

Fig. 20.4 Typical slide-on edge protector

20.4 Application of Webbing

20.4.1 During load planning, layout, and web application, sufficient distance must be allowed between the webbing and other securement items such as steel bands, separators, bearing pieces, etc., to avoid interference with and/or damage to webbing should the load shift during transit.

20.4.2 To avoid degrading the yield strength of the webbing, it must be applied flat and uniformly on the winch mandrel, avoiding folds, creases, etc. Webbing that has kinks, overlaps (except on winch mandrels), or folding (unless by design) throughout its length must not be applied.

20.4.3 When secured and/or tensioned using a winch or ratchet buckle, at least 6 in. of webbing is to be inserted into the mandrel or drum slot (see Fig. 20.5). A minimum of two rotations must then be made of the mandrel, resulting in at least two wraps of the webbing on the mandrel when tensioned.

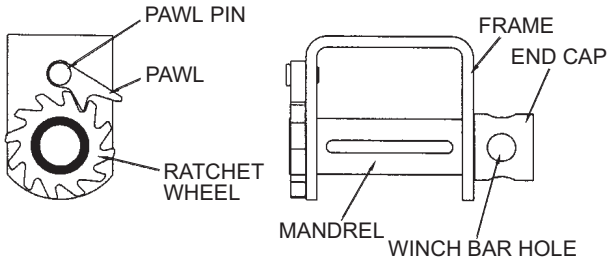

Fig. 20.5 Permanent mount web winch

20.4.4 At origin, straps must not be applied at a lateral angle greater than 5° to the point of attachment. Refer to the illustration in Fig. 20.6.

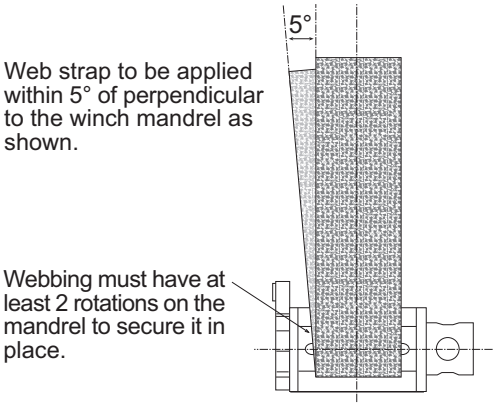

Fig. 20.6 Proper strap application

20.4.5 Tensioning Web Tie-Downs

20.4.5.1 When manually tensioning a permanently mounted winch, a winch bar should be used in accordance with Rule 20.3.2. Tension should be applied to the webbing or assembly with reasonable pressure. It is intended that tension be applied by no more than one person using a winch bar until the webbing is taut. To the extent possible, tension should be equalized across the load, over the full length of the tie-down, keeping in mind that the webbing will encounter resistance over every angle it passes.

20.4.5.2 A power tensioning device may be used on permanently mounted winches provided it is capable of applying smooth and continuous tension. When using a power tensioning device to tension webbing and assemblies, a torque value of 350 to 525 ft·lb at the mandrel is recommended. Impact or hammer wrenches and the like must not be used.

20.4.6 Appropriate edge protection must be utilized on all sharp edges and acute angles and at points of possible abrasion to the webbing. Where a specific type and kind of edge protection is called for in a figure, no deviation is permitted.

20.4.7 It is important to consider that, should the lading shift lengthwise during transit, the edge protection is subject to rotation about the webbing or complete displacement. Such a condition may leave the webbing exposed to potential damage and possible failure. For this reason, the design of the edge protection, its construction material, and its coefficient of friction between the protector and the lading and between the protector and the webbing must be considered.

IMPLEMENTED 01/2016

20.4.8 No knots, splices, or other repairs are permitted to webbing, fittings, or stitching.

20.4.9 Webbing may not be secured or anchored by tying, knotting, or clamping other than when lapped as intended on a winch or ratchet device.

20.4.10 Ensure that ratchet pawls or other positive locking systems are properly and completely engaged to prevent inadvertent or unintentional release.

20.4.11 Unused webbing is to be secured or stored in accordance with applicable instructions to prevent webbing from coming loose and hanging from the railcar.

20.5 Application of Webbing in General Rules Loads

20.5.1 On General Rules loads, webbing may not be used to provide the required longitudinal or lateral restraint. Approved web tie-down systems may be used to provide only the vertical load restraint. **Note:** An object must be secured with a minimum of two tie-downs.

20.5.2 On a General Rules load, the load must be restrained against longitudinal and lateral movement using blocking and/or securement systems consistent with these rules. The presence of web tie-down systems, applied for vertical securement per Rule 20.5.1, does not constitute lateral and/or longitudinal restraint. The web tie-down systems may not be factored into the calculation of the required lateral or longitudinal restraint. The load must be restrained to meet the requirements of Rule 5.3.1.

20.5.3 Cars used must be equipped with permanently mounted winches on both sides of the car, aligned to allow application of webbing over the top of the load at an approximate right angle (90°) to the side of the car. Webbing may not encircle the lading.

20.5.4 At origin, webbing must not be applied at a lateral angle greater than 5° to the point of attachment. See Fig. 20.6.

20.5.5 Tension webbing from both sides of a railcar after loading is complete.

20.5.6 A clearance of 2 ft must be maintained between any layer and applied webbing beyond the end, and in the longitudinal path of that layer.

20.5.7 Use weather-resistant corner/edge protection of sufficient size and thickness to protect webbing from damage by lading. If webbing is in contact with sharp edges or abrasive lading surfaces, the webbing must be protected, to avoid being damaged or weakened.

20.5.8 All webbing and tie-down assemblies are to be inspected for damage or excessive wear in accordance with Rule 20.6.

20.6 Inspection of Webbing and Tie-Downs

20.6.1 Before any synthetic web tie-down assembly is applied or placed in service, it must be inspected to ensure that the correct assembly is being used and to determine that the assembly meets the requirements of these rules.

20.6.2 The webbing and associated components must be inspected by the person handling the assembly during application, or just prior to its application by a person specifically designated by the shipper.

IMPLEMENTED 01/2016

20.6.3 A synthetic webbing and/or tie-down assembly must be removed from service if any of the following conditions are present. (Refer to Fig. 20.7 for illustrations of some sample defect conditions.)

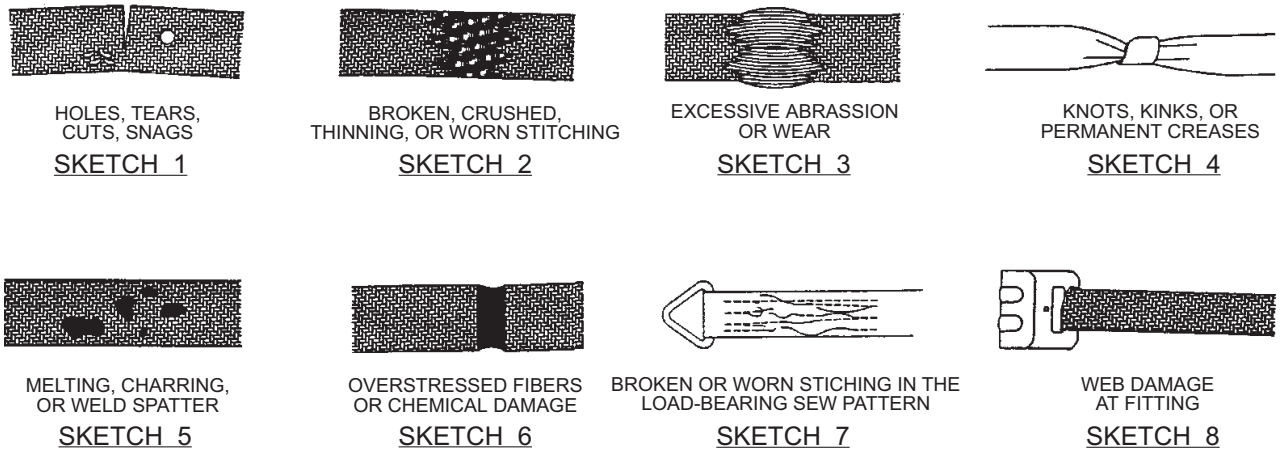

Fig. 20.7 Sample web defects

20.6.3.1 Holes, tears, cuts, snags, or embedded particles in the webbing.

20.6.3.2 Broken, crushed, thinning, or worn stitching in the load-bearing stitch patterns.

20.6.3.3 Excessive abrasion or wear.

20.6.3.4 Degradation due to ultraviolet radiation as indicated by excessive fading in conjunction with evidence of overall frayed yarn fibers or other detectable fabric deterioration.

20.6.3.5 Knots in any part of the webbing.

20.6.3.6 Melting, charring, or weld spatter on any part of the webbing.

20.6.3.7 Acid or alkali burns or other chemical contamination that inhibits or may inhibit the performance of the webbing.

20.6.3.8 Any other condition that appears to degrade the strength of the webbing or other component of the tie-down assembly (e.g., crushed areas, severe abrasions, etc.).

20.6.3.9 When a tie-down assembly contains broken or nonfunctioning fittings, tensioning devices, or hardware.

20.6.3.10 When a winch pawl fails to operate freely and is not capable of retaining strap tension by engaging the ratchet wheel under gravity.

IMPLEMENTED 01/2016

IMPLEMENTED 01/2016

20.7 Marking AAR-Approved Components

20.7.1 An AAR-assigned identification mark will be issued to a company that receives webbing approval or approval as an assembler. This mark will identify and correspond to the name of the manufacturer, weaver, and/or final assembling company. The applied AAR marking is in addition to any other labeling, marking, warning notices, etc., that may be required by other regulatory bodies or jurisdictions.

20.7.2 In accordance with WSTDA-T4, a high-contrast colored marker or thread, either solid or broken, centered on at least one face of the webbing, shall indicate the strength of the webbing. A single-line colored marker, as pictured in Sketch 1 of Fig. 20.8, indicates a minimum breaking strength of 5,000 lb/in. of web width. A double-line colored marker, as pictured in Sketch 2 of Fig. 20.8, indicates a minimum breaking strength of 6,000 lb/in. of web width. The marker(s) on the webbing is for the purpose of identifying the web strength for renewal purposes and is not to imply the maximum strength or the WLL of the entire assembly, which will likely be less.

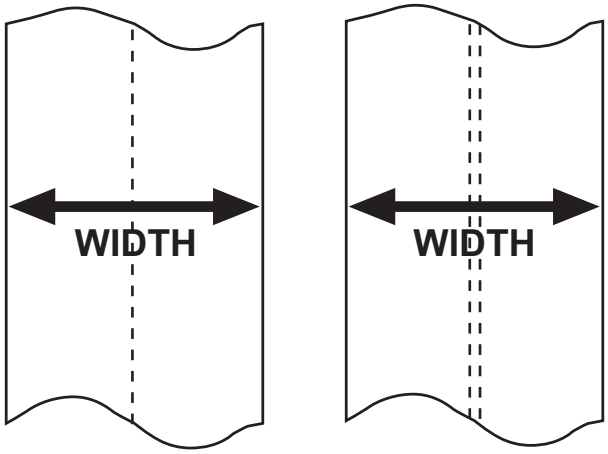

SKETCH 1
Single orange marker equals 5000 lb/in. of width*

SKETCH 2
Double orange marker equals 6000 lb/in. of width*

***Example:**
A single-line colored marker on a 4-in.-wide web indicates a strap break strength of 20,000 lb (4 × 5,000 = 20,000).
A double-line colored marker on a 3-in.-wide web indicates a minimum breaking strength of 18,000 lb (3 × 6,000 = 18,000).

Fig. 20.8 Web-strength-identifying colored markers

20.7.3 All AAR-approved webbing is to be identified with the weaver's AAR-assigned marking at intervals not more than every 10 ft with the following exception: for webbing that is fabricated to customer-specified lengths, the AAR marking is to be located within 18 in. of the finished end of the strap after assembly of any attachments and must be clearly visible.

20.7.4 All AAR-approved web tie-down assemblies are to be identified with the assembler's AAR-assigned marking and must include the working load limit of the assembly.

20.7.5 The AAR identification marking must be applied at the time of production and may be accomplished by printing, stenciling, attaching a metal tag permanently to an assembly fixture, or affixing a label located within 18 in. from one end of the assembly.

20.7.6 All required identification markings must be clearly and indelibly applied in such a way as to provide permanent identification for the useful life of the component. The company's marking must be preceded by the letters *AAR*, and separated by a hyphen (e.g., AAR-xxM) as shown in Fig. 20.9.

AAR-xxMA WLL 6,666 lb (3,024 kg)

ABC MFG. CORP.

Legend for AAR Marking, AAR-xxMA:
AAR = AAR issued approval
xx = AAR-assigned number to identify ABC Mfg. Corp.
M = AAR-approved as a manufacturer
A = AAR-approved as an assembler

Fig. 20.9 Example of AAR marking

20.8 Approved Companies and Components

20.8.1 Table 20.1 lists companies that have received AAR approval of their webbing in accordance with these rules.

Table 20.1 Approved webbing companies
(For the latest update to this table, go to the TTCI Web site at http://www.aar.com/otlr.htm)

Company	Ref. Part No.	Type and Width of Webbing	Web MBS lb (kg)	AAR Marking*	Approved Through (mm/yy)
Oppermann Webbing Inc.	P/N 6624102-93	4-in.-wide woven polyester, resin coated	20,000 (9072)	AAR-76M	09/14
Spanset, Inc.	P/N 141534	LoadGard™ woven polyester, uncoated, 4.0 in.	20,000 (9092)	AAR-72MA	12/13
Spanset, Inc.	P/N 152622	LoadGard™ woven polyester, coated, 4.0 in.	20,000 (9092)	AAR-72MA	12/13
Southern Weaving Co.	P/N 1257LP0200	2-in. wide woven yellow dyed 40148 polyester	12,000 (5443)	AAR-73M	01/15
Southern Weaving Co.	P/N 1257LP0300	3-in. wide woven yellow dyed 40148 polyester	18,000 (8165)	AAR-73M	01/15
Southern Weaving Co.	P/N 1257LP0400	4-in. wide woven yellow dyed 40148 polyester	24,000 (10886)	AAR-73M	01/15
Southern Weaving Co.	P/N 1527XP0200	2-in. wide woven yellow dyed 40148 polyester	10,000 (4536)	AAR-73M	01/15
Southern Weaving Co.	P/N 1527XP0300	3-in. wide woven yellow dyed 40148 polyester	15,000 (6804)	AAR-73M	01/15
Southern Weaving Co.	P/N 1527XP0400	4-in. wide woven yellow dyed 40148 polyester	20,000 (9072)	AAR-73M	01/15
American Webbing Inc.	P/N 05004TPT	4-in. wide woven yellow dyed polyester	20,000 (9072)	AAR-77M	06/12
Ribbon Webbing Corp.	P/N P6000-2-314	2-in. wide woven yellow dyed polyester	12,000 (5443)	AAR-81MA	01/15
Ribbon Webbing Corp.	P/N P5000-4-314	4-in. wide woven yellow dyed polyester	20,000 (9072)	AAR-81MA	01/15
Ribbon Webbing Corp.	P/N P6000-4-314	4-in. wide woven yellow dyed polyester	24,000 (10886)	AAR-81MA	01/15

*M = Approved weaver/manufacturer
MA = Approved weaver and assembler

IMPLEMENTED 01/2016

20.8.2 Table 20.2 lists those companies that have received AAR approval of their tie-down web assemblies in accordance with these rules.

Table 20.2 Approved web assemblies and/or tensioning devices
(For the latest update to this table, go to the TTCI Web site at http://www.aar.com/otlr.htm)

Company	Model or Ref. Part No.	Type or Description	Assy. WLL lb (kg)	AAR Marking*	Approved Through (mm/yy)
SpanSet, Inc.	P/N 152622 P/N WS4xxP	4-in.-wide Weargard™ orange premium polyester, PVC impregnated with SY-8110 permanent-mount winch assembly	5,000 (2268)	AAR-72MA	09/13
Pacific Cargo	P/N 45XX-FH-AAR	4-in. Web Assy. with 4-in. Flat Hook	5,500 (2495)	AAR-75A	12/14
Pacific Cargo	P/N 46XX-VR-AAR	4-in. Web Assy. with 4-in. V-ring ends	6,600 (2994)	AAR-75A	12/14
Pacific Cargo	P/N 20521120	2-in. Ratchet Webbing Assy.4-in. x 48-ft. strap with 1-in. Formed Eye.	3,335 (1513)	AAR-75A	09/14
Pacific Cargo	P/N 20521140	2-in. Web Assy. w/ Twisted Snap Hooks.	3,335 (1513)	AAR-75A	09/14
Pacific Cargo	P/N 20521130	4-in. Ratchet Webbing Assembly.	5,000 (2268)	AAR-75A	09/14
Pacific Cargo	P/N 20521090	4-in. Web Assy. Blade Tie-down Cradle.	5,000 (2268)	AAR-75A	09/14
Holland/Portec Railway Products	P/N 20189790	2-in. Polyester Web Assy., Looped w/ Sewn Loop Ends and 3 Sleeve Protectors (a.k.a. Axle Strap)	12,500 (5670)	AAR-70A	05/15
Holland/Portec Railway Products	P/N 20520900	4-in. Polyester Web Assy. w/ Sewn Loop Ends and “D” rings.	5,000 (2268)	AAR-70A	05/15
Holland/Portec Railway Products	P/N 20993910	2-in. Polyester Web Assy. w/ Sewn Loop Ends, one having a “D” ring w/ Keyhole.	5,500 (2495)	AAR-70A	05/14
Ribbon Webbing Corp.	P/N S-4 X (length) FH18	4-in. Polyester Web Tie-down Assy. w/ Flat Hook.	5,400 (2449)	AAR-81MA	01/15
Ancra Int’l	P/N 41660-18-xxxR	3-in. Polyester Web Tie-down Assy. w/ Wire Hook # 43120-20 End Hardware.	5,400 (2449)	AAR-74A	01/15
Ancra Int’l	P/N 43795-10-xxxR	4-in. Polyester Web Tie-down Assy. w/ Flat Hook # 41766-18 End Hardware.	5,400 (2449)	AAR-74A	01/15
Ancra Int’l	P/N 43795-11-xxxR	4-in. Polyester Web Tie-down Assy. w/ Forged Delta Ring # 41632-12 End Hardware.	5,400 (2449)	AAR-74A	01/15
Ancra Int’l	P/N 43795-90-xxxR	4-in. Heavy Duty “X-treme” Polyester Web Tie-down Assy. w/ Flat Hook # 41766-18 End Hardware.	5,400 (2449)	AAR-74A	04/15

*M = Approved weaver/manufacturer
MA = Approved weaver and assembler
A = Approved assembler, finisher, or distributor

20.8.3 It is recommended that winches and ratchets be durably marked with the manufacturer’s name or logo and a working load limit rating in pounds and kilograms, in accordance with WSTDA-T3, latest edition.

IMPLEMENTED 01/2016

20.8.4 Figs. 20.10 and 20.11 illustrate approved devices and include important relevant information.

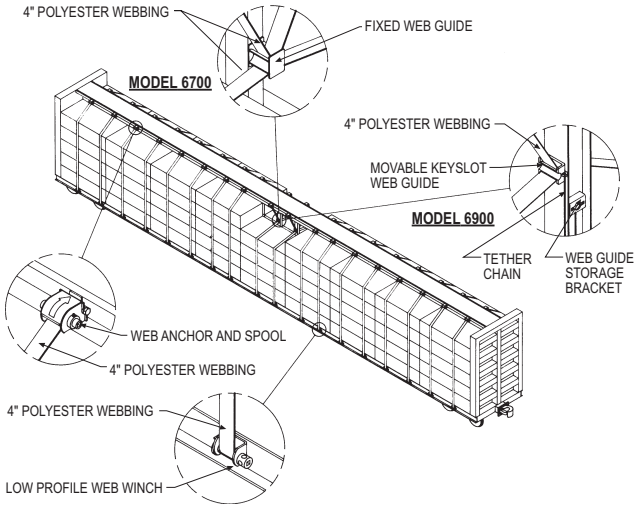

SAMPLE APPLICATION

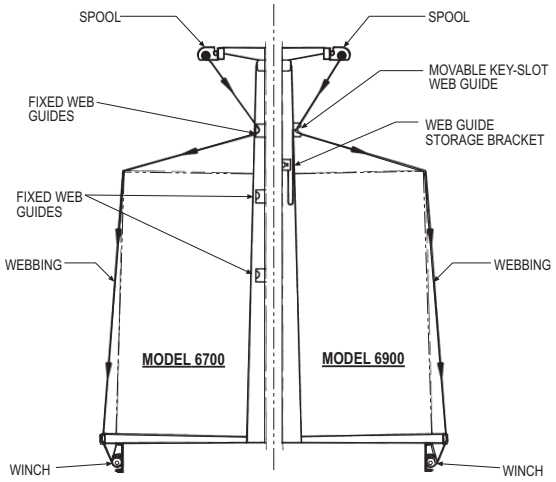

WEB ROUTE DIAGRAM

Notes:

1. This system consists of a conventional or low-profile side-sill-mounted web winch, an eave-mounted web-anchor storage spool, and either permanently mounted web guides spaced at uniform intervals on the intermediate posts or moveable key-slot web guides.

2. When applying this tie-down system, it must be ascertained that all webbing has been unwound from the top-mounted web-storage spool before tensioning. Unreleased strapping, resulting from tangled or stuck webbing, may become dislodged en route, resulting in a loose tie-down.

3. Model 6700—Unless otherwise specified, such as the condition described in Note 5 below, when applying this tie-down system equipped with permanently attached intermediate post web guides, the webbing must always be routed through the web guide above and closest to the top of the load.

4. Model 6900—Unless otherwise specified, such as the condition described in Note 5 below, when applying this tie-down system equipped with movable key-slot web guides, the web guide is to be positioned in the key slot above and nearest to the top of the load for routing of the webbing.

5. When the highest key slot or permanent mounted guide on the intermediate post is not accessible due to the load height, the webbing is to be routed directly from the anchor storage spool, over the side of the load, and directly to the winch. When this occurs, any unused moveable key-slot guides, if so equipped, are to be locked into the storage key-slot located on the interior side of the intermediate posts as illustrated.

Fig. 20.10 Models 6700 and 6900 Holland/Portec Railway Products top-mounted web anchor and storage system

IMPLEMENTED 01/2016

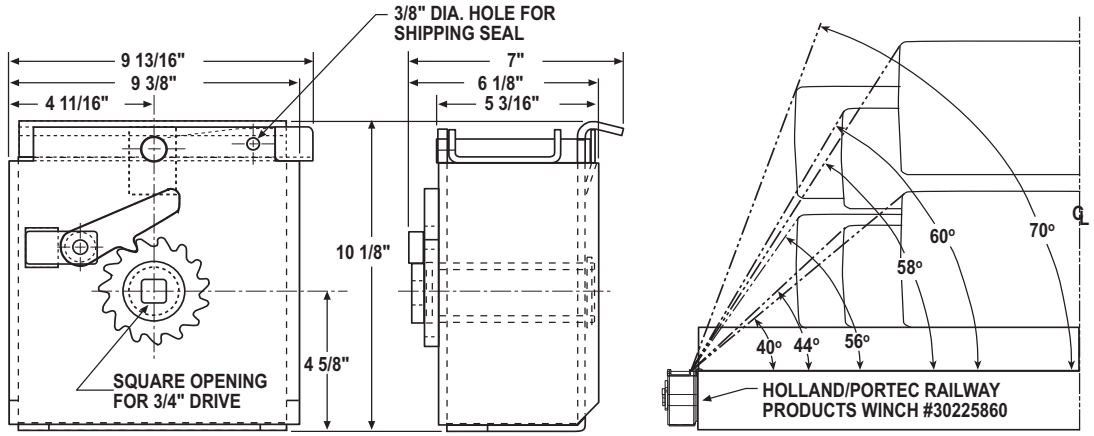

Notes:

1. Top of winch to mount at deck level.
2. Web angle must be 40° to car deck or greater.

Fig. 20.11 Holland/Portec Railway Products transverse-mounted winch—No. 30225860

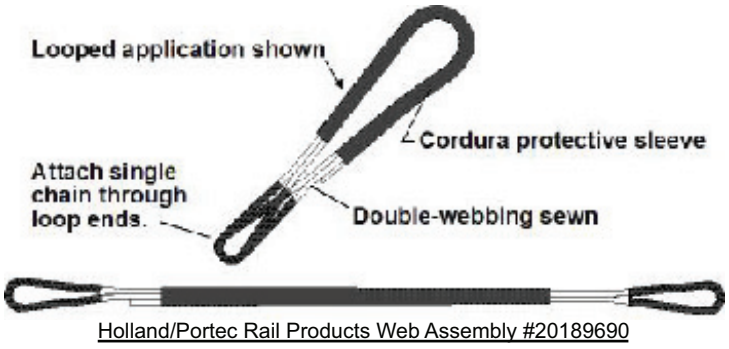

Fig. 20.12 Holland/Portec Railway Products web assembly with end loops

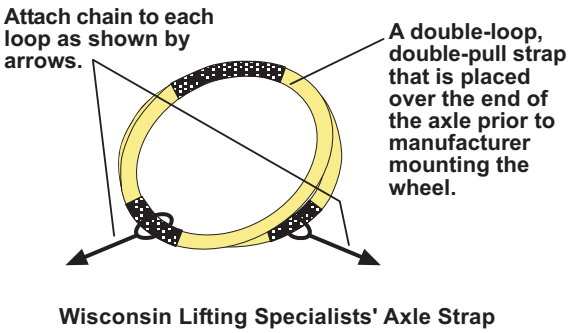

Fig. 20.13 Wisconsin lifting specialists' axle strap

IMPLEMENTED 01/2016

21. CHAIN, BINDERS, AND ASSEMBLIES

21.1 Explanation of Terms

21.1.1 *Working Load Limit (WLL)*. The maximum load (rated capacity) for which the chain, component, or assembly is authorized when the pull is applied in direct tension to an undamaged straight length of chain.

21.1.2 *Proof Test*. A term designating the minimum tensile force that has been applied to a chain, component, or assembly under a constantly increasing force in direct tension during the manufacturing process for testing purposes. Generally, this is a value two times the working load limit. This is a manufacturing integrity test and should not be used as criteria for service.

21.1.3 *Minimum Breaking Strength*. The minimum load at which the securement, component, or assembly has been found by representative testing to fail when a constantly increasing force is applied in direct tension. This is also referred to as *demonstrated breaking force* or *ultimate load*. This is a manufacturer's statistical attribute acceptance test.

21.1.4 *Design (Safety) Factor*. A term denoting a product's theoretical reserve capability. Computed by dividing the minimum breaking strength by the working load limit and expressed as a ratio, e.g., 4:1 or 4 to 1. (Unless otherwise specified in these rules, the design factor of a chain must meet or exceed the current specifications published by the National Association of Chain Manufacturers [NACM]. This does not apply to equipment placed into service prior to September 1, 1996.)

21.1.5 *Chain and/or Tie-Down Assembly*. Any items making up the assembly between each ultimate point of attachment, including all components such as chain, hooks, links, rings, swivels, shackles, turnbuckles, ratchets, binders, compression units, etc. When a working load limit is specified in a figure, all components of the assembly must meet the minimum requirements.

21.2 At least one link in every 3 ft of chain must be embossed with the manufacturer's distinctive mark or symbol identifying the grade of chain.

21.3 All grabhooks shall carry the size, manufacturer's identification, and maximum chain grade identification.

21.4 Grabhooks shall be of the clevis type except as provided elsewhere in this rule.

21.5 Closed-eye grabhooks of high test steel or alloy steel may be used with chains of the appropriate size and grade when such hooks carry the manufacturer's permanent and distinctive mark identifying the grade of the hook. Fig. 21.1 illustrates clevis and closed-eye grabhooks.

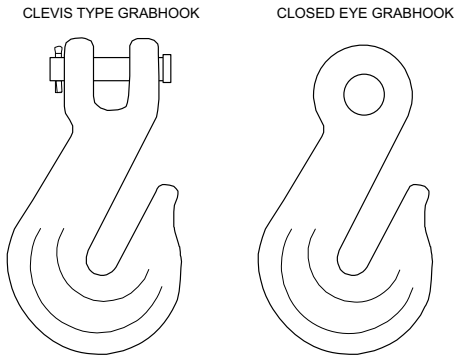

Fig. 21.1 Clevis-type and closed-eye grabhooks

21.5.1 Chain assemblies provided by a chain manufacturer with the grabhooks joined by a flash or butt-welded connecting link and carrying the manufacturer's permanent and distinctive mark identifying the grade of the link are acceptable.

21.5.2 Grabhooks may be attached by an approved repair-type connecting link of the type illustrated in Fig. 21.4 and listed in Table 21.3.

21.6 Chains, binders, chain attachments, and anchor points shall be maintained in good condition. The following conditions, which are illustrative and not all-inclusive, are prohibited:

21.6.1 Cracks, cracked welds, or cracked links in chain, clevises, hooks, ratchets, turnbuckles, binders, or binder attachments.

21.6.2 Bent, twisted, stretched, collapsed, or otherwise distorted links.

21.6.3 Links weakened by gouges or pits.

21.6.4 Chain repaired or joined with repair links of a type not illustrated in Fig. 21.4.

21.6.5 Links obviously worn or showing other visible evidence of loss of strength.

IMPLEMENTED 01/2016

21.6.6 Knots or twists in any portion of the chain.

21.6.7 Spread or distorted grabhooks.

21.6.8 Chain or any chain assembly components that have been subjected to high temperature, direct flame, or extraneous welding operations, as evidenced by heat-induced discoloration.

21.6.9 An anchor point that is used in the securement of the load and that is in a weakened condition or shows evidence of loss of strength because of cracks, breaks, distortion, or other deterioration.

21.7 Load Binders and Tensioning Devices

21.7.1 Three types of approved chain load binders are acceptable for use in securement of open top loads—lever type, ratchet type, and turnbuckle type. See Fig. 21.2 for illustrations of each.

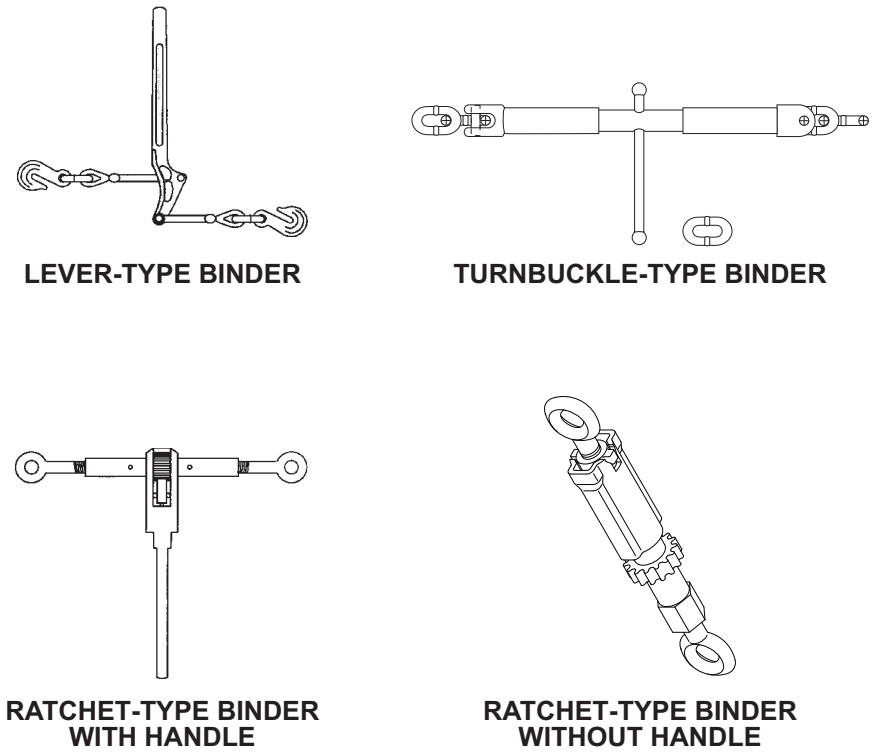

Fig. 21.2 Lever-, ratchet-, and turnbuckle-type binders

IMPLEMENTED 01/2016

21.7.2 Binders acceptable for use on open top shipments are listed in Tables 21.1 (lever type) and 21.2 (ratchet and turnbuckle type).

Table 21.1 Acceptable lever-type binders for chains

(For the latest update to this table, go to the TTCI Web site at http://www.aar.com/otlr.htm)

Binder Mfg. & Model	Type of Chain			
	3/8 HT	3/8 Alloy	1/2 HT	1/2 Alloy
ACCO Industries, Inc. Model BX 300		X		
ACCO Industries, Inc. Model BXR 310		X		
ACCO Industries, Inc. Model BX 400				X
ACCO Industries, Inc. Model BX 600		X		
Midland Forge Model 105		X		
Midland Forge Model 105-C		X		
Midland Forge Model 106		X		
Campbell Chain Model C7R		X		
Campbell Chain Model C7L		X		
Durbin-Durco Model DD-7-1		X		
The Crosby Group Model Lebus R-7	X			
The Crosby Group Model Lebus 7-1	X			
The Crosby Group Model Lebus A-1		X	X	
The Crosby Group Model Lebus R-A		X	X	
The Crosby Group Model Lebus C-1				X
Peck & Hale Model 55MTC/1598 Anti-kickback w/ Screw Adjuster				X

Table 21.2 Acceptable ratchet- and turnbuckle-type binders

(For the latest update to this table, go to the TTCI Web site at http://www.aar.com/otlr.htm)

Binder Manufacturer	Model	Marking	Binder Type		Size (in.)	Capacity (lb)
			Ratchet Type	Turnbuckle Type		
Columbus McKinnon (Holland/Portec Railway Products)	(Holland / Portec Railway Products) 10918600		X		1/2	40,000
RUD-Kettenfabrik	RUD VSPS	SPS 8S H1H		X	1/2	48,000
RUD-Kettenfabrik	RUD VSPSR 16-VIP		X		1/2	48,000
The Crosby Group (Ireco)	Lebus R-10	R-10	X		1/2	46,000
The Crosby Group (Ireco)	Lebus R-C-10	R-C-10	X		1/2	46,000
Columbus McKinnon (Redstreak)	(Redstreak)19961206	3/8 G8	X		3/8	28,400
Peerless (Redstreak)	(Redstreak)19980727	3/8 G7	X		3/8	28,400
Durabilt (Redstreak)	(Redstreak)20000929	DR-1-Plus	X		3/8	28,400
Durabilt Mfg. Inc.	DR-3	DR-3	X		5/8	52,000
Durabilt Mfg. Inc.	DTT-2	DTT-2	X		1/2	48,000
Holland/Portec Railway Products	Load Binder	H7752	X		1/2	55,000
Holland/Portec Railway Products	Gravity Lock Load Binder	70645	X		1/2	55,000

21.7.3 Binders are to be marked with the rated capacity that is equal to their minimum breaking strength. Binders that are listed in Table 21.1 are identified as to size of chain with which they are to be used.

21.7.4 The working load limit of the chain should be equal to one quarter of the rated capacity of the binder.

IMPLEMENTED 01/2016

21.7.5 Binders must be compatible with the size of chain with which they are to be used.

21.7.6 Binders must be equipped with two grabhooks except when chain assemblies contain grabhooks for shortening chains or the binder is permanently attached with clevises, links, or similar devices as an integral component in a tie-down chain assembly.

21.7.7 The welding of binders to chain is prohibited except in the manufacturing process. Binders may be attached to chain using a repair-type connecting link of the type shown in Fig. 21.4. The connecting link must be at least equivalent to the chain in strength.

21.7.8 Binders of a style that could open or otherwise result in an undesired release of chain tension during transit must have the operating handle wired or otherwise secured to prevent such a release.

21.8 Chain Attachment

21.8.1 Welding of chains directly to the car is prohibited.

21.8.2 Permanent attachment of chains to stake pockets is not recommended because this defeats their purpose.

21.8.3 Attachment of chain to welded anchors is permitted provided attachment has sufficient lineal inches of weld to provide a rated strength equal to 125% of the minimum breaking strength of the chain.

21.8.4 U-bolt cable clamps that meet ASTM specifications may be used to secure chains to a railcar. For 3/8-in. high test and alloy chain, use a 1/2-in. U-bolt cable clamp having 32,500-lb minimum breaking strength. For 1/2-in. high test and alloy chain, use a 5/8-in. U-bolt cable clamp having 50,000-lb minimum breaking strength.

21.8.5 Approved removable chain anchor devices are illustrated in Fig. 21.3.

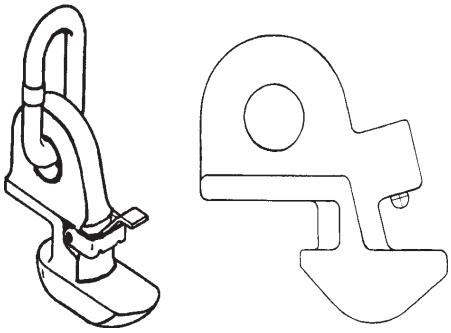

PECK & HALE, INC. HOLLAND/PORTEC RAILWAY PRODUCTS

Fig. 21.3 Approved removable chain anchors

21.8.6 Removable chain anchors of the type illustrated in Fig. 21.3 are designed to work integrally with a floor-mounted grid system. Removable chain anchors must be equipped with an effective feature to prevent unintentional disengagement if slack develops in the tie-down assembly.

IMPLEMENTED 01/2016

21.9 Chain Repairs

21.9.1 Repairs to chains must be made using an approved repair device listed in Fig. 21.3 and illustrated in Fig. 21.4. Each of these devices is rated by the manufacturer to equal the size and grade of chain in which it is used.

The link must carry the manufacturer's permanent and distinctive mark and identify the grade of the link.

Table 21.3 Approved repair link manufacturers

Acco Industries, Inc. (Kuplok Mechanical Coupling Link)
Campbell Chain Company (Quick A Loy)
Columbus McKinnon (Hammerlock)
Crosby Company (Lok A Loy)
Dominion Chain Company (Accoloy)
Dominion Chain Company, Ltd. (Kuplex Chain Joiner)
Holland 1/2 in. Mechanical Coupling Link Part No. 68072 (H C 1/2)
Holland 3/8 in. Mechanical Coupling Link Part No. 71284 (C 10-12)
Weisslock WA62 H37 (Holland/Portec)

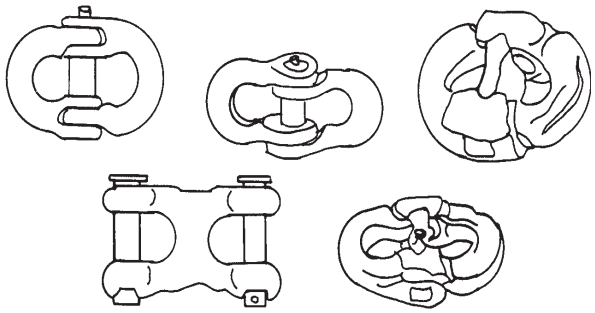

Fig. 21.4 Approved repair links

21.9.2 Locate repair links where they will not impair the use of corner protectors, tensioning devices, locking devices, or other features of the chain assemblies.

21.9.3 Repairing of chains by welding is prohibited.

21.9.4 Use of missing-link-type connecting links, lap links, and cold shuts, such as those illustrated in Fig. 21.5, are prohibited.

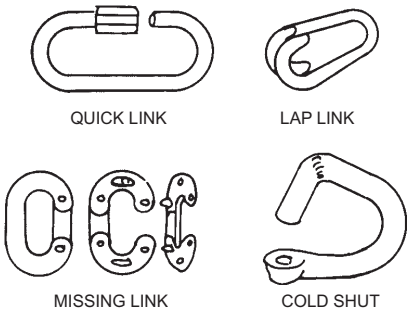

Fig. 21.5 Prohibited chain repair links

21.9.5 The use of bolts to repair broken chains or to secure ends of chains when hooks are missing is prohibited.

21.9.6 The tying of chains for any purpose other than securing hooks from displacement is prohibited.

IMPLEMENTED 01/2016

IMPLEMENTED 01/2016

21.10 Application of Chains

21.10.1 A sufficient number of chains must be used to safely restrain the lading. The chain's rated minimum breaking strength will be the restraining value used in determining the number of chains required.

21.10.2 The number of chains required and their application to secure lading is to be determined using the formulas in Rule 5.3.1 and applications in Rules 5.4.2 and 5.4.3.

21.10.3 Chains used in the securement of commodities not equipped with tie-down fixtures and not subject to rolling are to be applied over the top of the load and at an approximate right (90°) angle to the side of the car whenever possible, except when the method of chain application is prescribed in a specific figure.

21.10.4 Chains used for the securement of commodities subject to rolling should be applied in such a manner as to provide equal restraint both laterally and longitudinally. Such chains should be applied as close to a 45° angle from the floor as possible.

21.10.5 Whenever practical, all available car chains should be used. Unused chains must be securely fastened to prevent displacement over the car side, presenting a potential hazard.

21.10.6 Whenever possible, chains should pass around or through stake pockets with the grabhook engaging the chain. The open end of the hook should be positioned so that gravity will pull the hook into the chain links, resisting disconnection if slack develops in transit (see Fig. 21.6 and Rule 21.10.7).

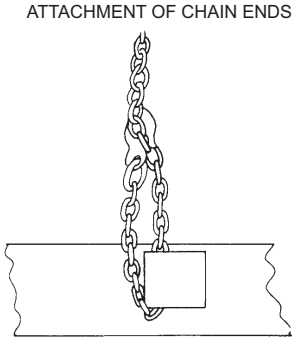

Fig. 21.6 Stake pocket chain connection

21.10.7 Open hooks must be minimally secured with wire or other suitable means over the opening to prevent the hook from becoming disengaged from the chain link to which it is secured, as illustrated in Fig. 21.7.

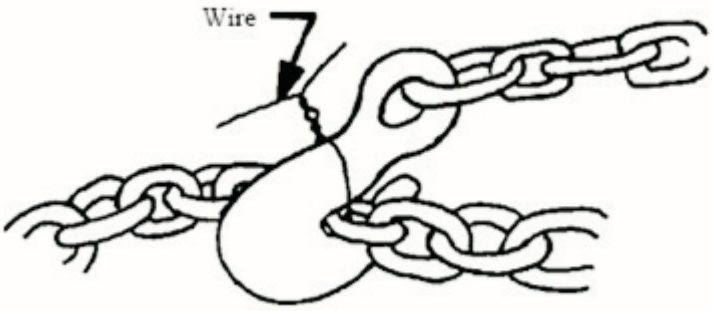

Fig. 21.7 Correct securement of grabhook and chain link using wire or tie wrap

21.10.8 After chains are tightened, they should be struck with a hammer or bar to eliminate any possible misalignment of links. Further tensioning may be required to take up any slack that develops due to link alignment.

21.10.9 After final tensioning, all winch assemblies must be adequately locked in position to eliminate the possibility of loosening during transit.

21.10.10 Ratchet pawls must be locked and the winch assembly must be correctly raised and locked in the track, as illustrated in Fig. 21.8.

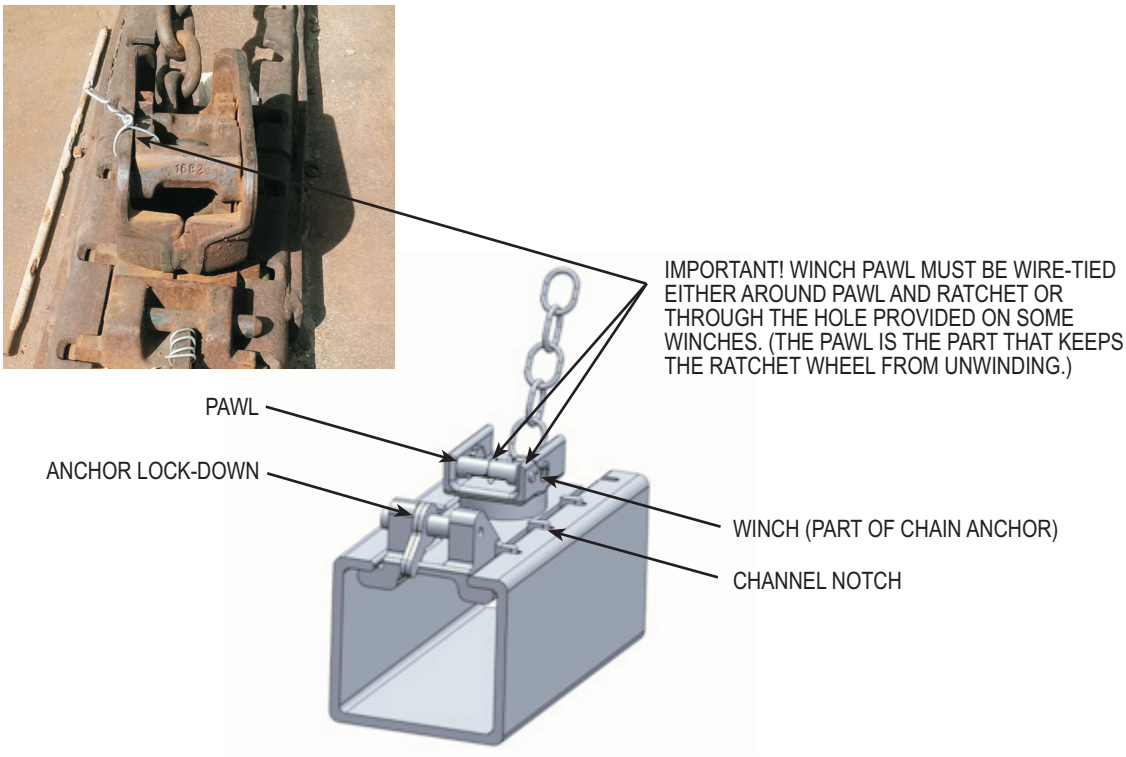

Fig. 21.8 Correct application of tie-down assembly and components

21.10.10.1 Winch pawl must be wire-tied either around the pawl and ratchet or through the hole provided on some winches. (The pawl is the part that keeps the ratchet wheel from unwinding.)

21.10.11 Chain and chain tie-down assemblies, dimensions, and minimum breaking strengths are shown in Appendix D, paragraph 4.7. See Table 21.4 for approved chain manufacturers and methods of identification.

Table 21.4 Approved chain manufacturers and method of identification

Manufacturer	Grade 30	Grade 43	Grade 70	Grade 80	Special Alloy	
					Prior to 9-1-96	Eff. 9-1-96
Acco	G3	G4	G7	A8A	—	—
Boltmaster-Taylor	BTPC or PC	THT	BT7	TAC	TAC	—
Campbell	C3/CP or P	C4/CH	C7	CA/C8 (+000)	CA/C8	—
Columbus McKinnon	CM/PC or G30	CM/HT or G43	CM/SG7 or G70	CM/Ha or HA800	—	—
Crosby	CG/PC/3	CG/C/4	CG/C/7	CG/A/8	—	—
Laclede	L3	N4 or L4	N7 or L7	G8 or L8	—	—
Holland/MacLean Fogg	—	—	—	—	-A-, P, PA or P8	P1H, PWAH, P10, PWA100
Peck & Hale[a/]						PCH16-10
Peerless[a/]	PC	PH	P7	P8	—	—
Holland/Portec[a/]	—	—	—	—	-A-, H, HA800, or BE	H37(8), W8 or 55
RUD-Kettenfabrik	—	—	—	VIP 8S	—	—
Teledyne McKay	—	4MK/MKH	MK7	MK8	—	—
Turner & Seymour	T3	T4	T7	—	—	—

[a/] All chain assembly components must be equal or greater in strength to the component chain in the chain assembly.

IMPLEMENTED 01/2016

21.11 Securing Commodity on Flatcars Equipped with Alloy Chain Tie-Down Assemblies

Fig. 21.9 illustrates an example of one type of chain assembly used on tie-down-equipped flatcars with floor channels (typically used to secure vehicles, tractors, and similar equipment). If compression unit gap is zero (solid), device becomes a "chain link." A solid gap makes loosening extremely difficult for the unloader.

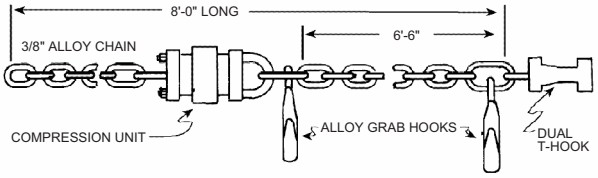

3/8" ALLOY CHAIN ASSEMBLY—18,000-lb PROOF TEST

Fig. 21.9 Example of 3/8-in. chain assembly

21.11.1 Each commodity must be secured in accordance with the appropriate figure covering that commodity, using at least the minimum number of alloy chains required. If sufficient quantity of chain assemblies are not available for the total load securement, it will be necessary to chain-secure all possible locations and cable the balance of the load in accordance with the AAR method covering the commodity involved. If used, the cable must be of equal or greater strength than the 3/8-in. alloy chain.

21.11.2 An equal number of tie-down chains must be attached on each side and end of the commodity to be secured.

21.11.3 Tie-down winches are to be directly in line across the car to prevent possible twisting of the commodity during any in-transit shocks.

21.11.4 Before making chain hook-up, turn winch drum sufficiently to position approximately 1/2 turn of chain around the drum.

21.11.5 Swivel-type ratchets must be positioned so that the chain extends from the underneath side of the winch drum and at a point closest to the commodity being restrained.

21.11.6 Chain angles and attachment points or locations on the commodity must be made in accordance with the manufacturer's requirements and recommendations. To the extent allowed, apply chains as close to a 45° angle as possible.

21.11.7 After chains are tightened, they should be struck with a hammer or bar to eliminate any possible misalignment of links. Further tensioning may be required to take up any slack that develops due to link alignment.

21.11.8 After final tensioning, all winch assemblies must be adequately locked in position to eliminate the possibility of loosening during transit.

21.11.9 Ratchet pawls must be locked and the winch assembly must be correctly raised and locked in the track.

21.11.10 All unused chain tie-down assemblies must be securely positioned to eliminate the possibility of displacement over the car side, presenting a potential hazard.

IMPLEMENTED 01/2016

22. WIRE ROPE/CABLE

22.1 Where wire rope/cable is specified under detailed figures, the ends must be overlapped a minimum of 12 in. and must be secured with the number of U-bolt cable clamps as indicated in Appendix D, Table D.18. **Note:** The terms "wire rope" and "cable" will hereafter be interchangeable for the purposes of this rule, unless otherwise noted.

22.2 The wire rope/cable must be protected at all sharp corners and edges. Where thimbles are used to prevent sharp turns and protect wire rope/cable from sharp edges, they must be secured with a U-bolt cable clip. Fig. 22.1 provides examples of clip and thimble application and wire rope gripper and chain hoist used for tightening cable.

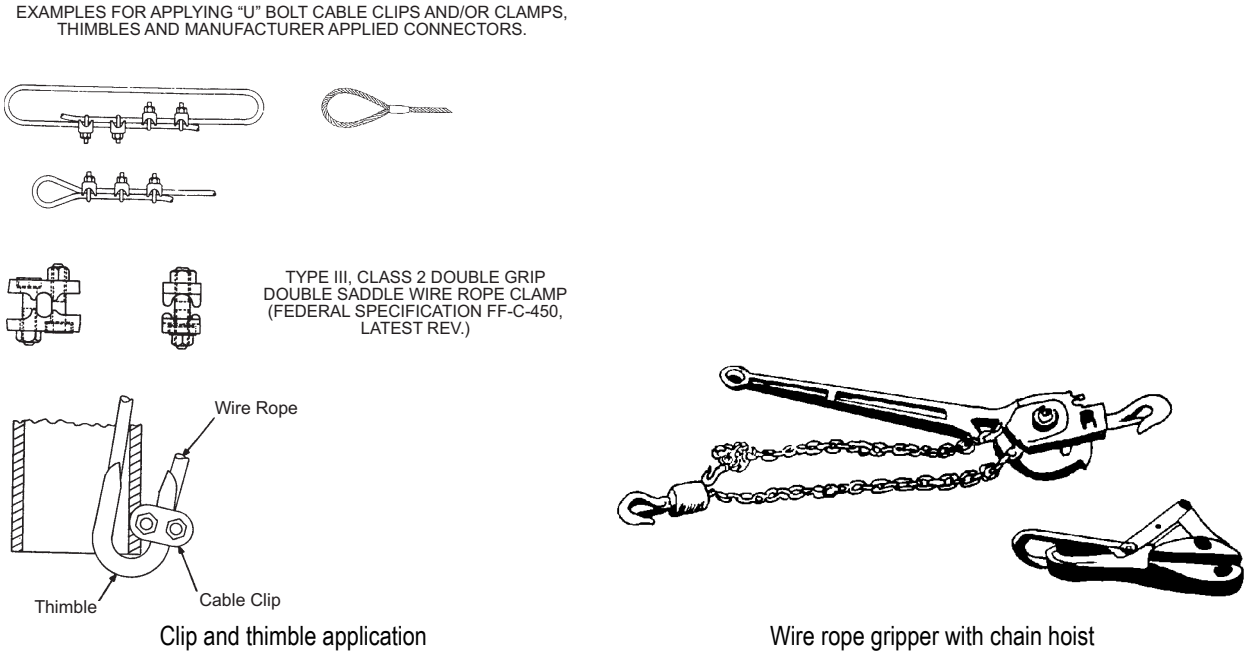

Fig. 22.1 Wire rope securement

22.3 Any wire rope/cable exhibiting one or more of the following defects should be replaced on sight:

22.3.1 Broken cables should be removed and replaced prior to moving a loaded car.

22.3.2 Damaged Cables

22.3.2.1 Any cable with more than 13 wires broken at any one location or with one broken strand. (See Fig. 22.2 for description of components in a wire rope.)

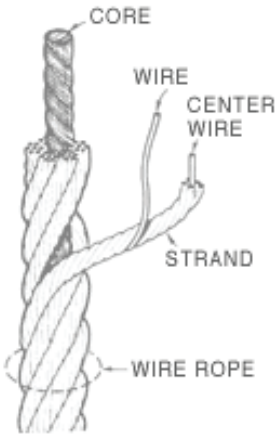

Note: Every wire rope has three basic components:

1. The wires that form the strands and collectively provide rope strength;
2. The strands, which are helically around the core
3. The core, which forms a foundation for the strands.

Fig. 22.2 Wire rope components

IMPLEMENTED 01/2016

22.3.2.2 Cable with flattened cross-section or a kink greater than 60°

22.3.2.3 Cable whose size is reduced by 1/64 in. (0.4 mm) per each 1/4 in. (8 mm) diameter of cable (e.g., a 1 in. cable worn down more than 1/16 in.)

22.3.2.4 Cable with clamp bolts that cannot be tightened (the clamp bolts must be replaced in kind)

22.4 Center Beam Type Cars

22.4.1 Cable tail must not protrude more than 6 in. outside of ratchet barrel.

22.4.2 Bolted clamp must be properly fitted inside the ratchet barrel and tight against the hole on the barrel. (See Fig. 22.3 for improper application and Fig. 22.5 for proper application.)

Fig. 22.3 improperly fitted bolted clamp on ratchet barrel

Fig. 22.4 Properly fitted bolted clamp on ratchet barrel

22.4.3 All cables must be properly secured per manufacturer's recommendation prior to car movement (Fig. 22.5).

Fig. 22.5 Properly secured cable for empty movement of railcar

IMPLEMENTED 01/2016

22.4.4 Cable assemblies must be equipped with non-metallic edge protectors. Existing damaged, broken, or missing metal edge protectors must also be replaced with non-metallic edge protectors. Existing metal edge protectors that are in good condition do not need to be replaced.

22.4.5 Cable assemblies must be replaced when knots cannot be removed and interfere with proper winding of cable.

22.4.6 Cable assemblies must be replaced when cable chain is worn or corroded more than 25%

22.5 Tensioning Wire Rope/Cable

22.5.1 Tension wire rope/cable using a turnbuckle or suitable tensioning device.

22.5.2 When manually tensioning a permanently mounted winch equipped with a 3/8-in.-diameter cable, such as may be installed on many centerbeam flatcars, the use of an 18-in. steel winch bar is recommended. Tension should be applied to the cable or assembly with reasonable pressure. It is intended that tension be applied by no more than one person using an appropriate winch bar until the cable is taut. To the extent possible, tension should be equalized across the load, over the full length of the tie down, keeping in mind that the cable will encounter resistance over every angle it passes.

22.5.3 A power tensioning device may be used when tensioning a permanently mounted winch equipped with a 3/8-in.-diameter cable, provided it is capable of applying smooth and continuous tension. When using a power tensioning device to tension such cabling and assemblies, a torque value of 200 ft·lb at the mandrel is recommended. Impact or hammer wrenches and the like must not be used.

22.6 When wire ropes/cables are used, they should be located so as not to contact each other, if possible. When cables must contact each other, suitable padding or other means must be utilized and secured in place to prevent chafing or wear to the cables.

22.7 Refer to Appendix D, Table D.18 for wire rope and/or cable dimensions, strength, and securement standards.

22.8 The number of clips and/or clamps shown in Table D.18 in Appendix D is the minimum for safe operation.

22.9 The proper type of cable clip and/or wire rope clamp suitable for the type and size of cable being applied must be used.

22.10 When applying wire rope clips and/or clamps, the U-bolt or bolt assembly must be applied on the short end of the rope. Refer to Fig. 22.1 for illustration.

22.11 The distance between clips and/or clamps should be equal to six times the rope diameter.

22.12 When the number of clips and/or clamps shown in Appendix D, Table D.18, is used and clips and/or clamps are properly applied, they should develop approximately 85% of the minimum breaking strength (MBS) of the wire rope and/or cable.

22.13 A manufacturer's applied connectors are acceptable as a substitute for clips and/or clamps provided the values in Rule 22.12 are met or exceeded.

23. TURNBUCKLES, CLEVISES, AND SHACKLES

23.1 Turnbuckles must meet U.S. Federal Specification FF-T-791, latest revision, and must be an open-body-forged type.

23.1.1 Each turnbuckle must be permanently marked with a working load limit and the manufacturer's name or trademark.

23.1.2 When tensioned, threaded ends must extend a minimum of 1 in. into the barrel and must be locked to prevent working loose. This can be accomplished by using jam nuts or securing the turnbuckle with wire.

23.1.3 Welding turnbuckles, threads, or nuts is prohibited.

23.1.4 Turnbuckles used in tie-down systems in conjunction with cables, chains, or rods must have a minimum breaking strength of not less than the component parts of the securement system.

23.1.5 Turnbuckles using open hooks must have hooks wired unless equipped with a functioning and engaged retaining feature.

23.1.6 Minimum breaking strength (MBS) for turnbuckles in combination with end attachments used are provided in Appendix D, Table D.19.

IMPLEMENTED 01/2016

23.1.7 Fig. 23.1 shows combinations of turnbuckles and different end attachments.

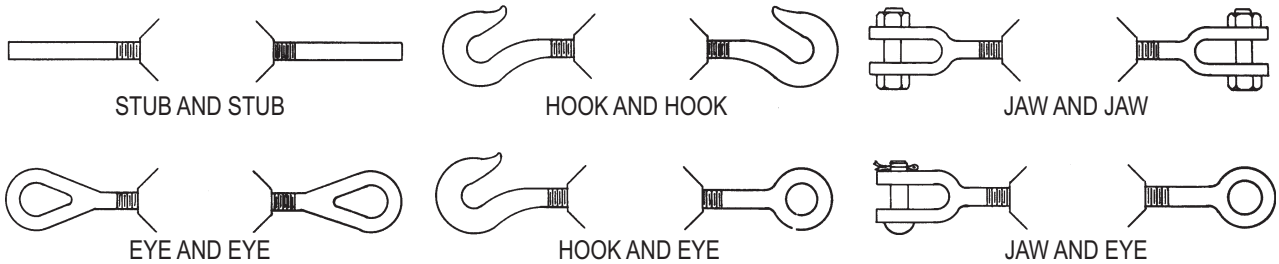

Fig. 23.1 Turnbuckle end attachments

23.2 Clevises and Shackles

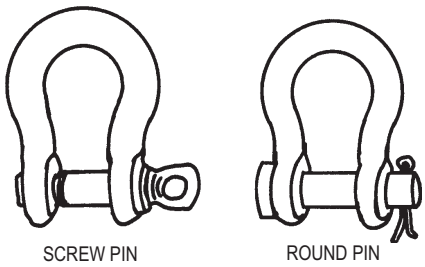

Fig. 23.2 Clevis types

23.2.1 Clevises and shackles must have a strength equal to or greater than the securement attached to them.

23.2.2 Clevis and shackle pins must be secured to prevent displacement.

23.2.3 Clevises and shackles equipped with screw pins must have additional securement to prevent displacement.

24. WIRE—HIGH TENSION AND COMMON

24.1 High tension wires must have a percentage of elongation in 10 in. from 6.5 to 16%.

24.2 Refer to General Rule 25 for permissible substitutions.

24.3 When common annealed wire is used for securement purposes, the method of tying, tightening, and determining the number of strands is to be in accordance with Rule 13.16. Twist wire taut with a rod, bolt, pipe, or appropriate length of 2 in. × 2 in. lumber, and secure it to prevent unwinding.

24.4 High tension wires encircling a pile must be machine-tensioned and twist-tied on top of the load, when possible, and located as far away from the end of the load as practical to avoid slipping off if the load shifts.

24.5 High tension wire attached to stake pockets, lading strap anchors, or other attachment points must be machine-tensioned. The location of the twist-tie or washer attachment must be within 6 in. of the point of anchorage.

24.6 The use of secondhand or reclaimed high tension wire is not permitted.

24.7 For high tension and common annealed wire, dimensions, and breaking and joint strength, refer to Tables D.20 and D.21 in Appendix D.

24.8 A 3/16-in. high tension wire strand, 1 × 3, may be substituted for 1 1/4 in. × .029 in. high tension steel bands in Fig. 61 (Rev. 03/00), Section 5. This wire strand is identified by a single blue wire included as part of the three-wire strand. An approved seal will be identified by the letters “AAR” and “WRI” (Wire Rope Industries), as shown in Fig. 24.1.

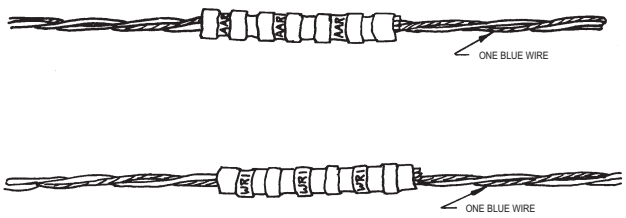

Fig. 24.1 Multistrand wire

IMPLEMENTED 01/2016

24.9 For applying 8-strand common annealed wire, refer to Fig. 24.2, Sketches 1 through Alternate 4.

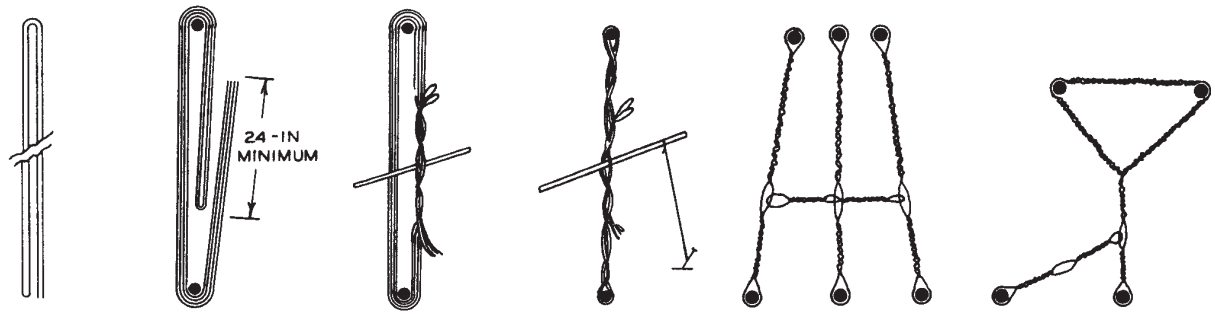

SKETCH 1

Single strand of wire eight times length of span between tie-down points plus 8 ft. Double in half and double in half again.

SKETCH 2

Apply the strand around one point of attachment and around the other, having strands overlap approximately half way between points of attachment.

SKETCH 3

Hand-twist the strands ends.

SKETCH 4

Finish twisting taut at center with appropriate length of pipe, rod, or 2-in. x 2-in. lumber. Do not remove twister. Secure to car floor or tie-down point to prevent untwisting.

ALTERNATE SKETCH 4

Twister may be removed when tie-downs are wired to prevent untwisting as shown above.

Fig. 24.2 Wire-tying methods

24.9.1 Wires may be cut to twice the length between tie-down points, plus 2 ft. The cut lengths of wire are to be placed together and wrapped around the two points of attachment shown in Sketch 2. Follow the procedure shown in Sketches 3 and 4 to complete the tying. Each piece of wire cut in this manner will equal two applied strands.

24.9.2 Wires to be pretwisted or cable-twisted must be cut eight times the length of span between tie-down points, plus 8 ft. Double in half and pretwist. Follow the procedure shown in Sketches 2, 3, and 4 to complete the tying.

24.9.3 Wire ties used to prevent the untwisting of securement wires are not required on equipment weighing 5,000 lb or less.

25. SUBSTITUTION OF SECUREMENT ITEMS

25.1 Approved load securement items specified within these rules must be used. Substitutions may only be made in accordance with the following provisions, unless otherwise specified in the figure.

25.2 In addition to the requirements of this rule, the specific rules pertaining to the application of specific securement items must be referenced and complied with.

25.3 Steel may be substituted for wooden stakes in accordance with Rule 13.4.

25.4 High tension bands and high tension wires may be substituted for each other if of equal or greater breaking strength. (Refer to Rule 24.8 for additional substitution of wire for steel bands in Fig. 61 (Rev. 03/00) of Section 5.)

25.5 High tension bands may be substituted by an equal number of high tension bands of lesser dimensions if of equal or greater breaking strength.

25.5.1 Except for steel product figures with sharp edges, 1 1/4 in. high tension bands may be substituted by an equal number of Type 1A, Grade 6, non-metallic strapping for all figured loads, unless otherwise specified in the figure.

25.5.2 Except for steel product figures with sharp edges, 2 in. high tension bands may be substituted by an equal number of Type 1A, Grade 7, non-metallic strapping for all figured loads, unless otherwise specified in the figure.

25.5.3 Except for steel product figures with sharp edges, 2-in. high tension bands may be substituted by an equal number of Type 1A, Grade 8, non-metallic strapping for all figured loads, unless otherwise specified in the figure.

25.5.4 Type 1A, Grade 6, Grade 7, or Grade 8 strapping is acceptable for use as substitution for *all* 2 in. × 0.044 in. and smaller steel bands indicated in *all* pipe-loading figures in Section 2 and for *all* concrete-loading figures in Section 3.

25.6 Approved, high-strength, regular-duty strapping may be substituted for high tension banding in accordance with Rule 17.3.2.

25.7 Approved Rotterdam strapping, also referred to as Unit Strap Lifting Method (USLM) strapping, may be substituted for equal-sized high tension banding. (See Rule 43.1 for more details.)

25.7.1 High tension bands used to secure a load to a car may be substituted by chains and/or cables if of equal or greater breaking strength. When used, chains and/or cables must be properly tensioned.

IMPLEMENTED 01/2016

25.7.2 Nonmetallic strapping may be used for packaging or load securement only when permitted under a specific figure, or as specified in General Rule 19, unless otherwise restricted in the figure.

25.7.3 High tension wires may be substituted by an equal number of high tension wires of lesser diameter if of equal or greater breaking strength.

25.7.4 Common annealed wire may be substituted by wires of other gauge if the total breaking strength is equal or greater.

25.7.5 Common annealed wire may be substituted by wire rope or cable of equal or greater strength.

25.7.6 Rods, bolts, or flat bars with threaded ends must not be substituted by high tension bands, high tension wires, or common annealed wires.

25.7.7 Where a rule or figure specifies a special grade bolt or fastener to be applied, no substitutions are permitted.

25.7.8 Missing or broken chains may be replaced with wire rope or cable of equal or greater breaking strength.

25.7.9 Mechanical brakeman may be substituted with load cushioners.

25.8 Wire rope/cable of equal or greater strength may be substituted for steel rod in Section 3 figures.

25.9 In forest product figures in Section 5, solid fiberboard lath can be used as stickers where figure calls for stickers as an optional item.

26. LEFT VACANT INTENTIONALLY

27. LEFT VACANT INTENTIONALLY

IMPLEMENTED 01/2016

IMPLEMENTED 01/2016